KSTAR PV Inverter Catalogue

Stock code 002518

KSTAR

HEADQUARTERS
Add: 4/F, No.1 Bldg.Software Park, Keji C. Rd. 2nd, Hi-Tech Industrial Zone, Shenzhen 518057, P.R.China

KSTAR
Website：www.kstarpower.com

CONTACT
Tel: +86-755-86169858
Fax: +86-755-86168482

FACTORIES ADDRESS
Add: Kstar Industrial Park, Fumin Industrial Zone, Guanlan Town, Shenzhen, P.R.China.
Add: Kstar Industrial Park, Zhongkai Hi-Tech Industrial Zone, Huizhou, P.R. China.
Add: Kstar Industrial Park, Guangming Hi-Tech Industrial Zone, Shenzhen, P.R.China.

Kstar reserves the right to change or modify product design, construction, specifications, or materials without prior notice and without incurring any obligation to make such changes and modifications on kstar products previously or subsequently sold. Kstar does not guarantee the items of the accuracy and completeness.

Version number: KSD/S 2016-04

Company Profile

Founded in 1993, Shenzhen KSTAR Science & Technology Co., Ltd (Stock Code:002518) is a National Torch Plan Key High-tech Enterprise, and also a pioneer of UPS industrial and a total solution provider for Data Center Critical Infrastructure & Photovoltaic Inverter Systems in Mainland China. KSTAR is fully committed to the R&D and has been providing high-quality products with full service to over 90 countries and regions worldwide, leading the industrial development with innovation.

① KSTAR Industrial Park at Guangming Hi-Tech Zone, Shenzhen, China
② KSTAR Industrial Park at Zhongkai Hi-Tech Zone, Huizhou, China
③ KSTAR Industrial Park at Guanlan Fuyuan industrial Zone,Shenzhen,China

01 Company Profile 01

03 Solutions for Photovoltaic Inverter System 03

09 Photovoltaic Inverter 09

String Grid-tied PV Inverter KSG Series 09

Single phase inverter (SM Series) (KSG-1K-SM / KSG-1.5K-SM / KSG-2K-SM / KSG-3K-SM) 11

Single phase inverter (DM Series) (KSG-3.2K-DM / KSG-3.6K-DM / KSG-4K-DM / KSG-4.6K-DM / KSG-5K-DM) 13

Three Phase inverter (DM Series) (KSG-10K / KSG-12K / KSG-15K / KSG-17K / KSG-20K) 15

Three Phase inverter (TM Series) (KSG-30K / KSG-50K / KSG-60K) 17

Three Phase inverter (HV Series) (KSG-36K-HV / KSG-60K-HV / KSG-80K-HV) 19

Central Grid–tied PV Inverter 21

GSL Series PV Inverter (GSL0500 / GSL0630 / GSL0750) 23

GSM Series 4 MPPT PV Inverter (GSM0500 / GSM0630) 25

GSH Series 1500V PV Inverter (GSH1000) 27

GSL PV Inverter with transformer (GSL0100T / GSL0250T / GSL0500T) 29

Central Grid-tied PV Inverter (outdoors) 31

GSL Series Container (GSL1000 / GSL1260 / GSL1500) 33

GSM Series Container (GSM1000 / GSM1260) 35

GSH Series Container (GSH2000) 37

39 PV Energy storage bidirectional converter 39

KSE Series (KSE-3.6K / KSE-4.6K / KSE-5K) 39

GSE Series (GSE0050T / GSE0100T / GSE0250T / GSE0500T / GSE0630T / GSE0500 / GSE0630) 41

43 PV Array Combiner Series 43

45 Monitoring System 45

Small PV power station monitoring system 46

KSG Monitoring Software 47

KSM Data Collector 48

Wifi/Ethernet Communication Module 49

Medium–large PV power station monitoring system 50

KSolar Monitoring Software 50

DCU Data Collector 51

Ethernet Converting Module 52

Ambient Monitor 53

54 Solar Deep Cycle Battery Series 54

55 Product Certificate 55

56 Company Certificate 56

KSTAR Central Grid-tied PV Inverter Station Project
China Power Investment Corporation 200MW power station project in Golmud,Qinghai

Overview for Grid-tied Photovoltaic Power Station

Basic Principle

Photovoltaic inverter convert DC power generated by solar photovoltaic array into AC power with the same frequency and phase as the public grid.

Classification of Photovoltaic Grid-tied Power Station

According to the voltage level of the grid,it is divided into three levels:

- Small Grid-tied Photovoltaic Power Station——tie to the grid of 380V,400V
- Medium Grid-tied Photovoltaic Power Station——tie to the grid of 10KV~35KV
- Large Grid-tied Photovoltaic Power Station——tie to the grid of 35KV

Grid-tied Mode

The connection mode of photovoltaic power station tie to the grid can be divided into four ways——Dedicated Access, T Access, Dedicated Access or T Access to user's Internal power grid.

Requirements of Grid-tied Capacity

Small photovoltaic power station should not be more than 25% of the maximum load of the main transformer.

The capacity that T access to the medium photovoltaic power station of the grid should be limited in 30% of the maximum transmission capacity in grid lines. And the entire installed capacity of single grid connection point should be less than 6 MW.

How to make the photovoltaic power system more stable and efficient?

KSTAR, expert in integrated solutions for photovoltaic inverter system construction for highly efficient photovoltaic power station

KSTAR, an integrated solutions provider for photovoltaic inverter systems

KSTAR provides clients with integrated solutions for photovoltaic inverter,PV array combiner, DC power distribution cabinet, isolation transformer, turnkey station, and monitoring system.

Integrated solutions

- Reduce the cost
- Fast installation, convenient maintenance
- System with strong compatibility, easy to extend
- Perfect hardware functions
- Avoid system function overlap, reduce the system cost

Solutions for Large Grid-tied Photovoltaic Power Station

System can be connected to the grid of high voltage, for example, 22KV, 35KV or above. The power of solar array is feeded into the grid via PV array combiner, DC distribution, AC distribution solar inverter, and boost transformer.

Central Grid-tied PV Inverter recommended:

GSL Seires、GSH Seires

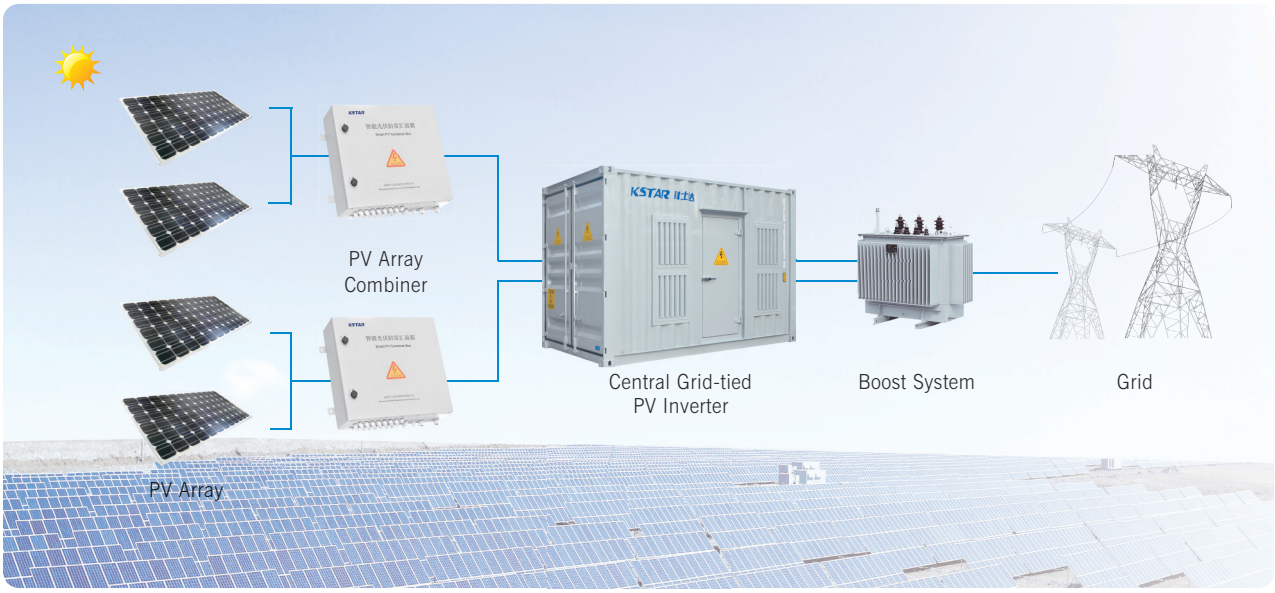

Solutions for Medium Grid-tied Photovoltaic Power Station

System can be connected to the grid of 10KV or 35KV, The power of solar array is feeded into the grid via PV array combiner, DC distribution, AC distribution solar inverter, and boost transformer.

Central Grid-tied PV Inverter recommended:

KSG Seires GSM Seires

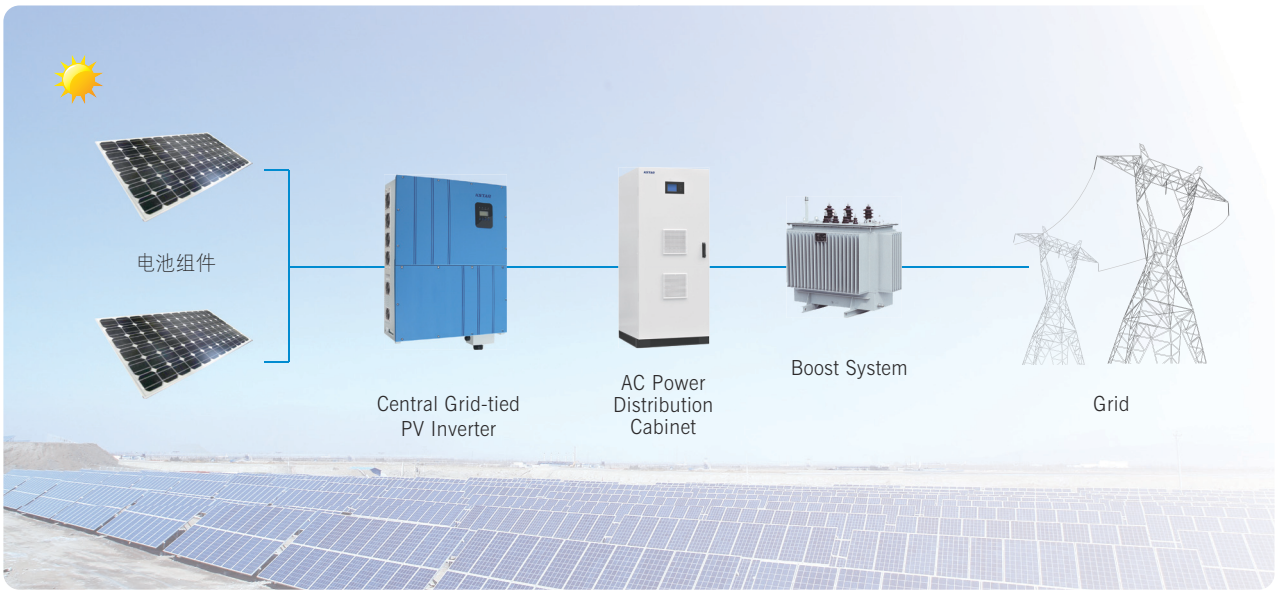

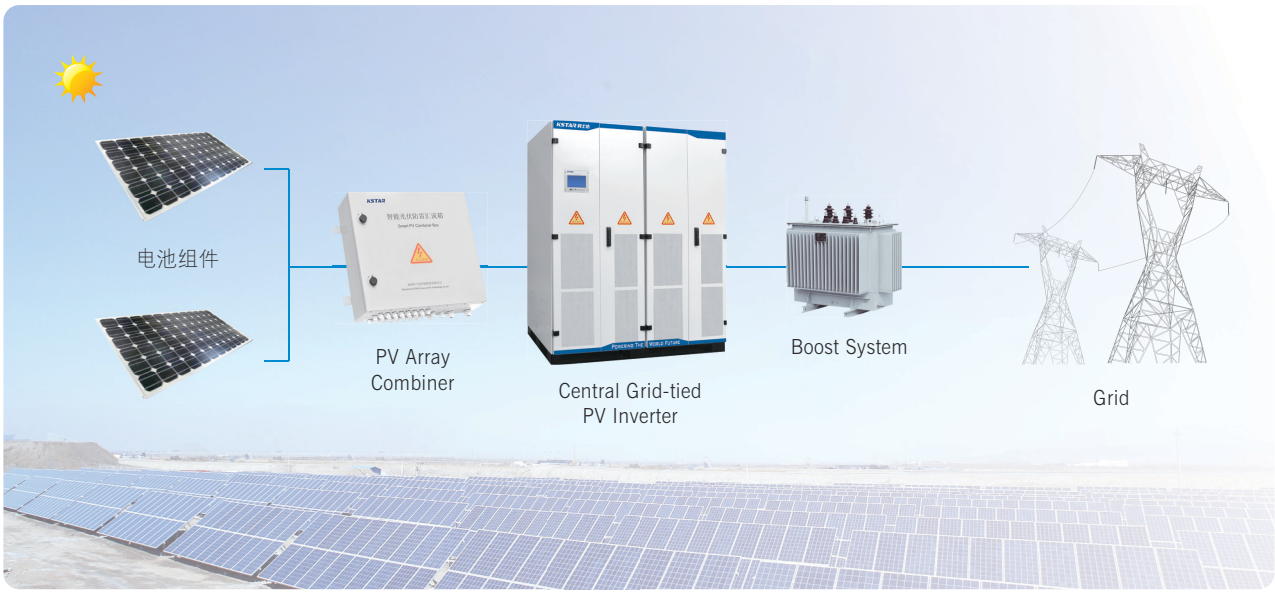

Solutions for Small Grid-tied Photovoltaic Power Station > *choose Central Grid-tied PV Inverter*

System can be connected to the grid of 380V, 400V. Once the local load requirements meet, the power of solar arrays is feeded into the grid via PV array combiner, DC distribution, AC distribution solar inverter, and boost transformer.

Grid-tied PV Inverter recommended:

GSL Seires、KSG Seires

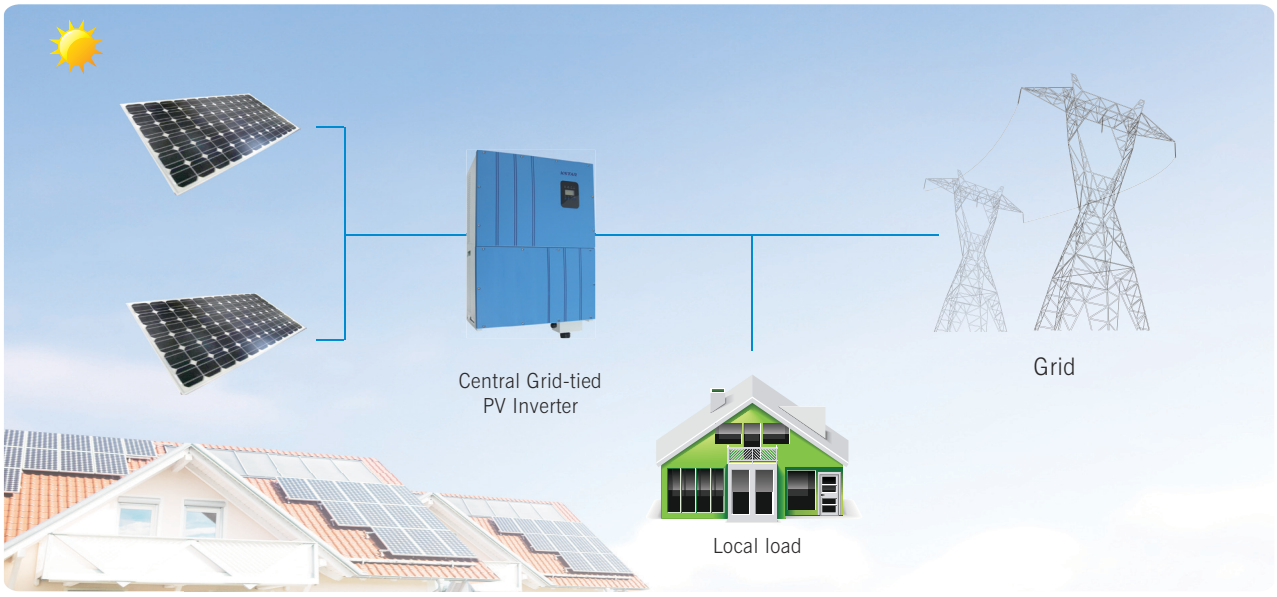

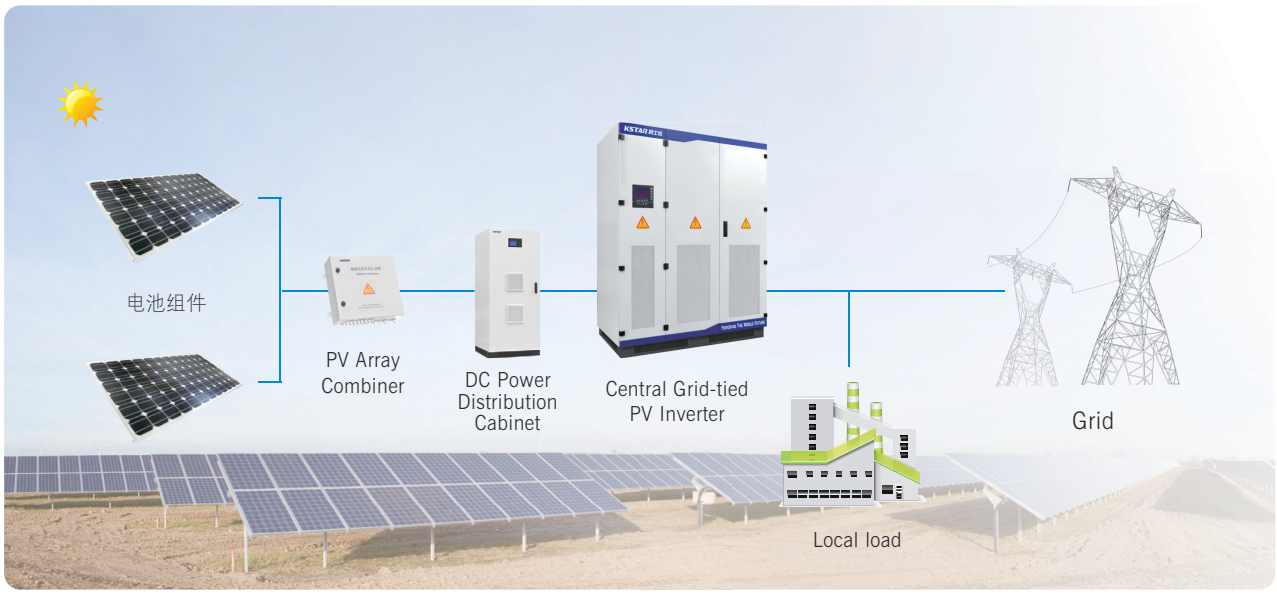

KSTAR String Grid-tied PV Inverter
Australia Tall Trees project

String Grid–tied PV Inverter

KSG-SM SERIES

1KW/1.5KW/2KW/3KW

- Max PV Voltage up to 500V
- Single MPPT
- High efficiency up to 97.5%
- Smaller and Lighter
- IP65 protection
- Easy installation

CE、TUV（VDE 4105/VDE 0126）、SAA、G83、C10/11

Efficiency curve

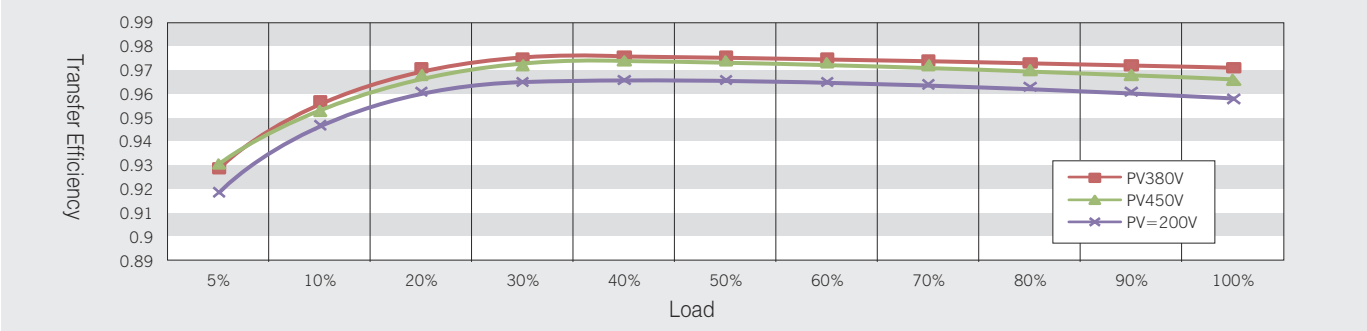

Circuit diagram

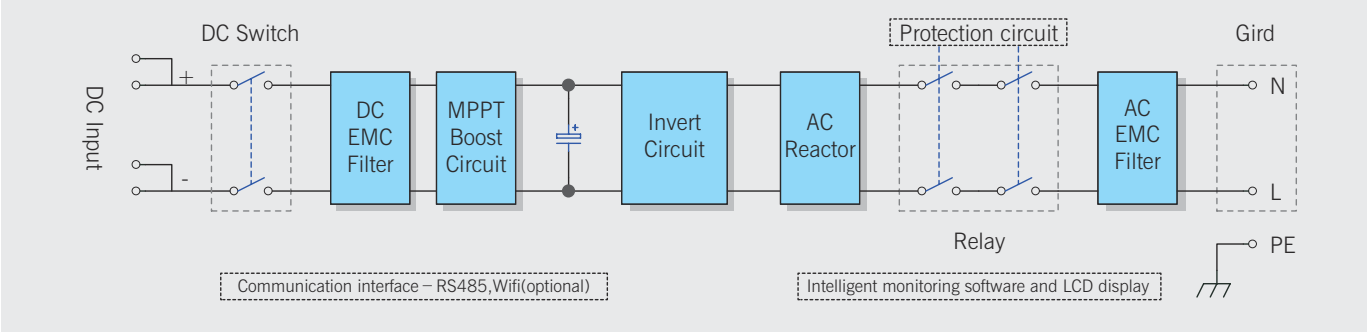

KSG-SM Series Technical Specifications

Model	KSG-1K-SM	KSG-1.5K-SM	KSG-2K-SM	KSG-3K-SM
Input (DC)				
Max. DC power	1150W	1600W	2100W	3100W
Max. DC voltage / Norminal DC voltage	500Vdc / 380Vdc			
MPPT voltage range	100~490Vdc			
Normal DC voltage	105~400Vdc	145~400Vdc	190~400Vdc	240~400Vdc
Min. / start DC voltage	120 / 130Vdc			
Number of MPP trackers	1			
Strings per MPP tracker	1			
Max. input current per MPP tracker	11A			13A
Output (AC)				
Max. AC output Power	1000W	1500W	2000W	3000W
Normal AC voltage	230Vac			
AC voltage range	230Vac±20%			
Normal AC grid frequency	50 / 60Hz			
AC grid frequency range	±5Hz			
Max. output current	4.5A	7A	9A	14A
Phase shift (cos φ)	1			
THDI	<3%			
AC connection	LN+PE			
Topology	Transformerless			
Efficiency				
Max. efficiency	96.5%		97.6%	
Euro-eta	96%		97%	
MPPT efficiency	99.90%			
Consumption: standby / night	<5W / <0W			
Protection devices				
PV input insulation protection	yes			
AC short-circuit protection	Yes			
Ground fault monitoring	Yes			
Mechanism Data				
Dimensions (W / L / D) in mm	264 / 326 / 127			
Weight	6Kg		7Kg	
Environment Data				
Operating temperature range	–25℃~+60℃			
Noise emission (typical)	≤ 25dB			
Cooling concept	Convection			
Protection rating	IP65			
Features				
LCD display	yes			
Interfaces	RS485 / WIFI (External)			

Specifications subject to change without prior notice.

KSG-DM SERIES

3.2KW/3.6KW/4KW/4.6KW/5KW

- Max PV Voltage up to 500V
- Double MPPT
- High efficiency up to 97.5%
- Smaller and Lighter
- IP65 protection
- Easy installation
- Reactive power controller
- Digital controller

CE、TUV（VDE 4105/VDE 0126）、SAA、G59、C10/11

Efficiency curve

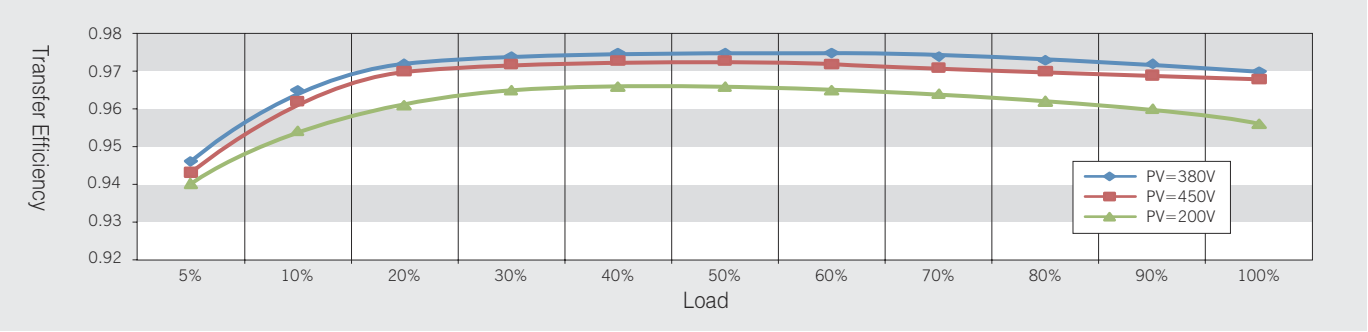

Circuit diagram

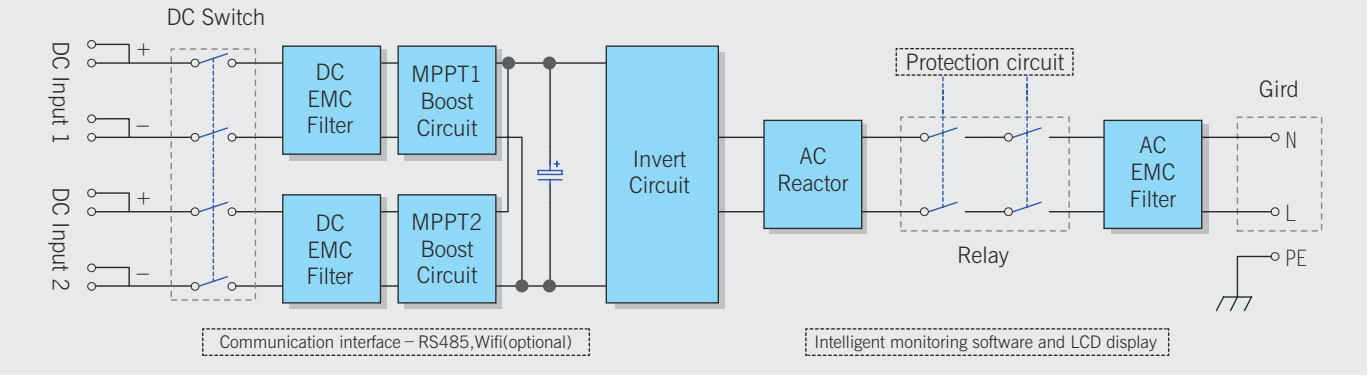

KSG-DM Series Technical Specifications

Model	KSG-3.2K-DM	KSG-3.6K-DM	KSG-4K-DM	KSG-4.6K-DM	KSG-5.0K-DM
Input(DC)					
Max. DC power	3300W	3800W	4200W	4600W	5200W
Max. DC voltage / Norminal DC voltage	500Vdc / 380Vdc				
MPPT voltage range	100~490Vdc				
Fullload mppt voltage range	120 / 150Vdc				
Min. / start DC voltage	150~400Vdc	145~400Vdc	165~400Vdc	200~400Vdc	
Number of MPP trackers	2				
Strings per MPP tracker	1				
Max. DC power per MPP tracker	1800W	2200W	2500W	3000W	
Max. input current per MPP tracker	11A / 11A	13A / 13A			
Output (AC)					
Max. AC output Power	3000W	3680W	4000W	4600W	5000W
Normal AC voltage	230Vac				
AC voltage range	230Vac±20%				
Normal AC grid frequency	50 / 60Hz				
AC grid frequency range	±5Hz				
Max. output current	14A	16A	17.5A	20A	22A
Phase shift (cos φ)	Lagging0.9 – leading 0.9				
THDI	<3%				
AC connection	LN+PE				
Topology	Transformerless				
Efficiency					
Max. efficiency	97.5%				
Euro-eta	97%				
MPPT efficiency	99.90%				
Consumption: standby / night	<5W / <0W				
Protection devices					
PV input insulation protection	Yes				
AC short-circuit protection	Yes				
Ground fault monitoring	Yes				
Mechanism Data					
Dimensions (W / L / D) in mm	329 / 466 / 149				
Weight	14.5Kg	14.9Kg		15.5Kg	
Environment Data					
Operating temperature range	–25℃~+60℃				
Noise emission (typical)	≤ 25dB				
Cooling concept	Convection				
Protection rating	IP65				
Features					
LCD display	yes				
Interfaces	RS485 / WIFI（Internal）				
Optional	DC Switch / WIFI				

Specifications subject to change without prior notice.

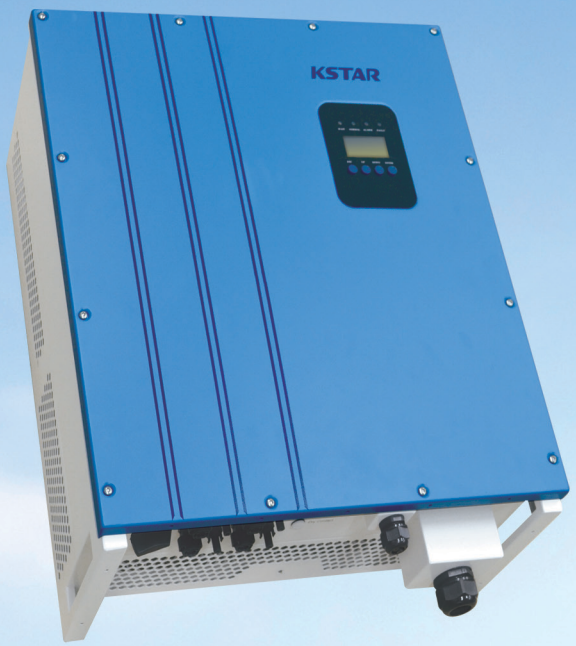

KSG-DM SERIES

10KW/12KW/15KW/17KW/20KW

- Max PV Voltage up to 1000V
- Double MPPT
- High efficiency up to 98.0%
- Smaller and Lighter
- IP65 protection
- Easy installation
- Reactive power controller
- Digital controller

VDE 4105 / VDE 0126

CE、SAA、BV（VDE 4105/VDE 0126）、C10/11

Efficiency curve

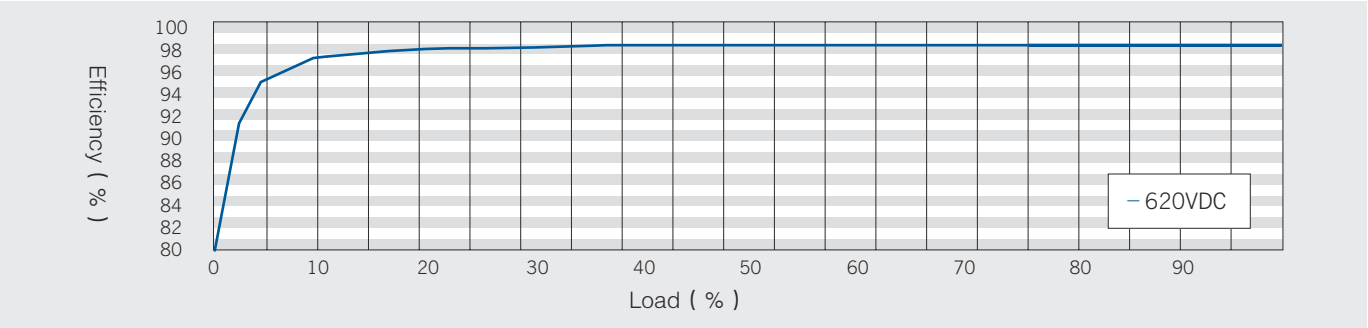

Circuit diagram

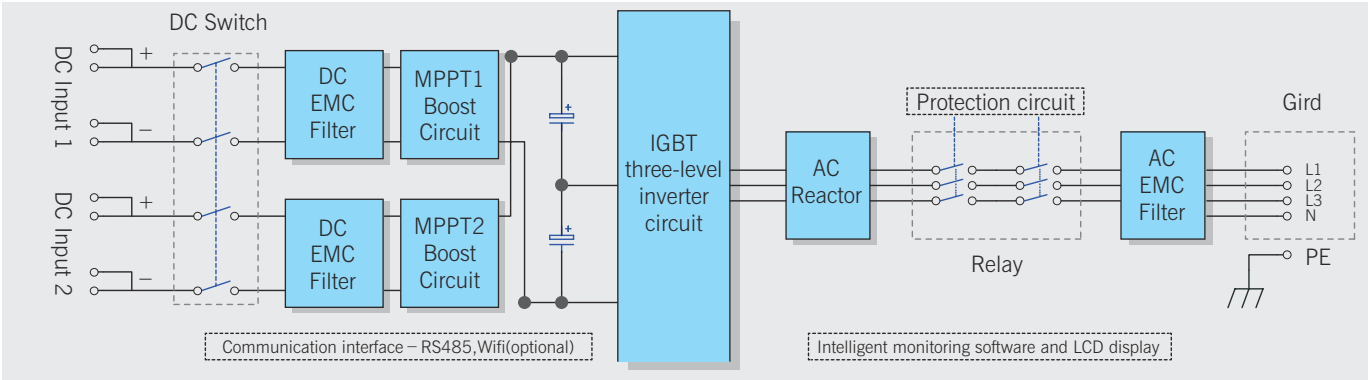

KSG-DM Series Technical Specifications

Model Specifications	KSG-10K	KSG-12K	KSG-15K	KSG-17K	KSG-20K
Input(DC)					
Max. DC power	11.5KW	13.5KW	16.5KW	18.5KW	22.5KW
Max. DC voltage	1000Vdc				
MPPT voltage range	250~950Vdc				
Full load voltage range	480~800Vdc				
Normal DC voltage	620Vdc				
Min. / start DC voltage	200 / 250Vdc				
Number of MPP trackers	2				
Strings per MPP tracker	1		2		
Max. input current per MPP tracker	13A / 13A		21A / 21A		
Output (AC)					
Normal AC output Power	10KW	12KW	15KW	17KW	20KW
Max. AC output Power	11KW	13KW	16KW	18KW	22KW
Normal AC voltage	400Vac				
AC voltage range	400Vac ±20%				
Normal AC grid frequency	50 / 60Hz				
AC grid frequency range	±5Hz				
Max. output current	17A	20A	24A	27A	32A
Phase shift (cos φ)	0.8leading- 0.8laging				
THDI	<3%				
AC connection	3W+N+PE/3W+PE				
Topology	Transformer less				
Efficiency					
Max. efficiency	98.0%				
Euro-eta	97.5%		97.5%		
Protection devices					
all-pole fault current monitoring unit	yes				
Ground fault monitoring	yes				
Mechanism Data					
Dimensions (W / L / D) in mm	553 / 715 / 228				
Weight	35Kg		39Kg		
Environment Data					
Operating temperature range	–25℃~+60℃				
Noise emission (typical)	≤40dB				
Cooling concept	Convection				
Protection rating	IP65				
Features					
LCD display	yes				
Interfaces	RS485				

Specifications subject to change without prior notice.

KSG-TM SERIES

30KW / 50KW / 60KW

- Max PV Voltage up to 1000V
- Three MPPT
- High efficiency up to 98.6%
- IP65 protection
- Easy installation
- Reactive power controller
- Digital controller

VDE 4105 / VDE 0126

CE、SAA、BV（VDE 4105/VDE 0126）、C10/11

Efficiency curve

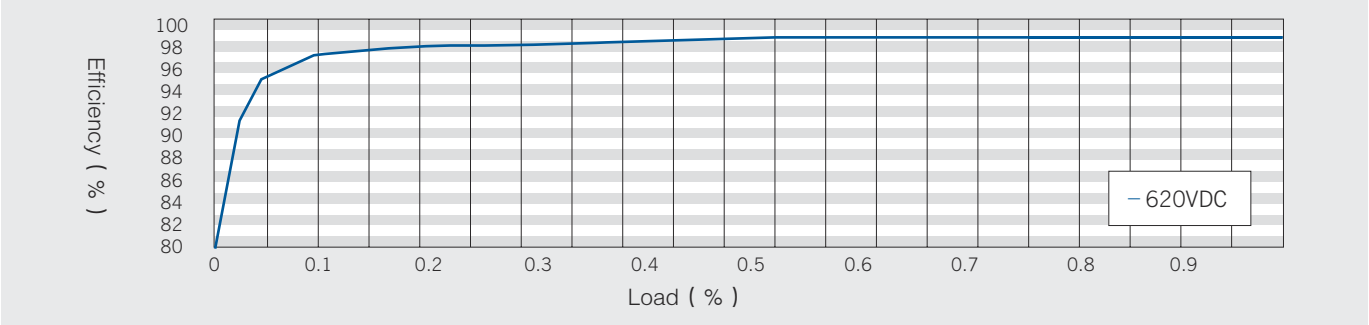

Circuit diagram

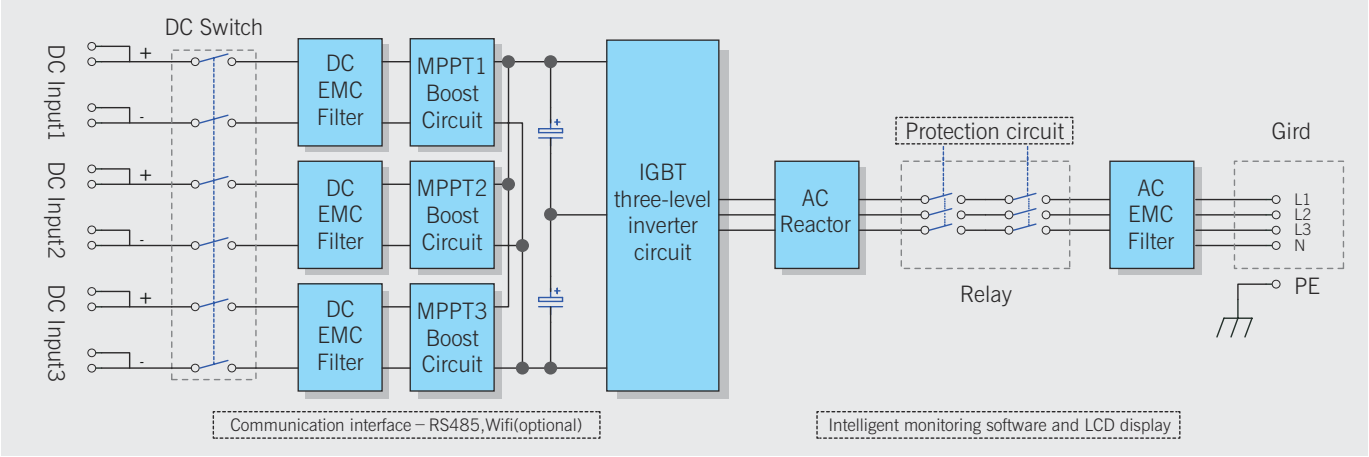

KSG-TM Series Technical Specifications

Model Specifications	KSG-30K	KSG-50K	KSG-60K
Input(DC)			
Max. DC power	35KW	56KW	67KW
Max. DC voltage	1000Vdc		
MPPT voltage range	250~950Vdc		
Full load mppt voltage range	480~800Vdc		500~800Vdc
Normal DC voltage	620Vdc		
Min. / start DC voltage	200 / 250Vdc		
Number of MPP trackers	3		
Strings per MPP tracker	2	4	
Max. input current per MPP tracker	26A / 26A / 26A	36A / 36A / 36A	40A / 40A / 40A
Output (AC)			
Normal AC output Power	30KW	50KW	60KW
Max. AC output Power	33KW	55KW	66KW
Normal AC voltage	400Vac		
AC voltage range	400Vac±20%		
Normal AC grid frequency	50 / 60Hz		
AC grid frequency range	±5Hz		
Rated. output current	44A	72A	87A
Max. output current	48A	80A	95A
Phase shift (cos φ)	0.8leading- 0.8laging		
THDI	<3%		
AC connection	3W+N+PE/3W+PE		
Topology	Transformer less		
Efficiency			
Max. efficiency	98.3%	98.6%	
Euro-eta	98.0%	98.2%	
Protection devices			
all-pole fault current monitoring unit	yes		
Ground fault monitoring	yes		
Mechanism Data			
Dimensions (W / L / D) in mm	636 / 958 / 260		
Weight	61Kg	68Kg	70Kg
Environment Data			
Operating temperature range	–25℃~+60℃		
Noise emission (typical)	≤40dB	≤60dB	
Cooling concept	Convection	fans	
Protection rating	IP65		
Features			
LCD display	yes		
Interfaces	RS485		

Specifications subject to change without prior notice.

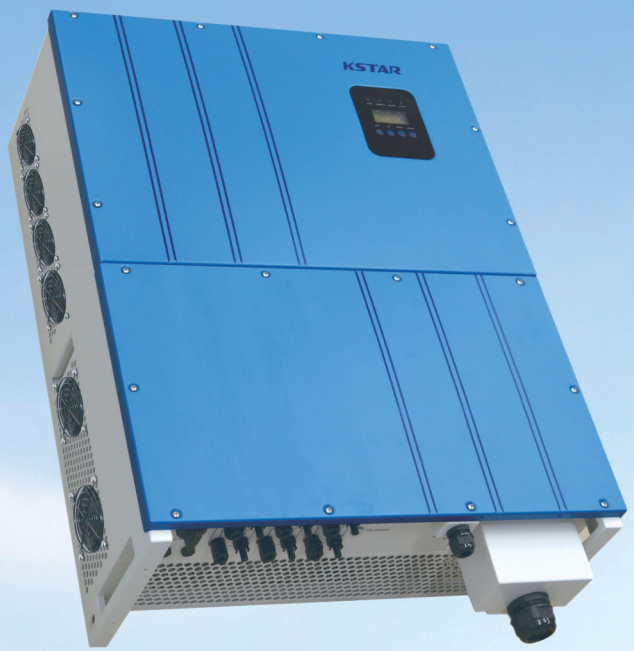

KSG-HV SERIES

36KW/60KW/80KW

- Max PV Voltage up to 1000V
- Multi-channel MPPT
- High efficiency up to 98.6%
- IP65 protection
- Easy installation
- Reactive power controller
- Digital controller

VDE 4105 / VDE 0126

CE、SAA、BV（VDE 4105/VDE 0126）、C10/11

Efficiency curve

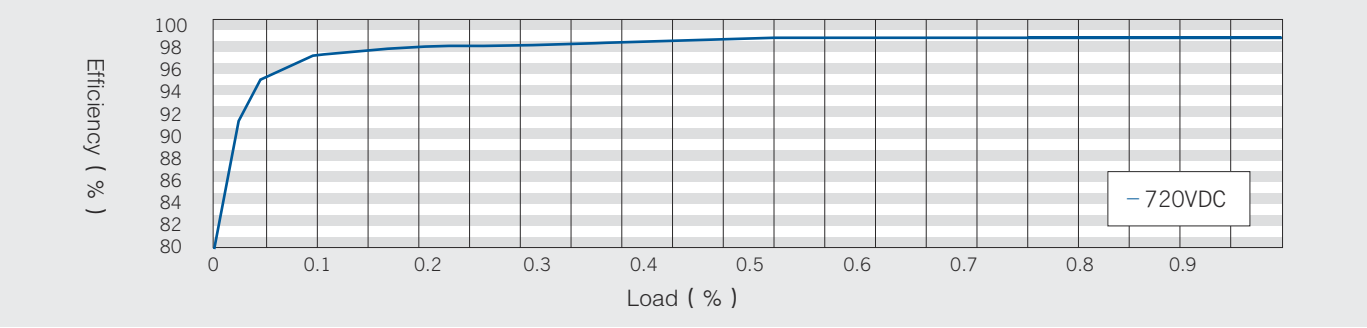

Circuit diagram

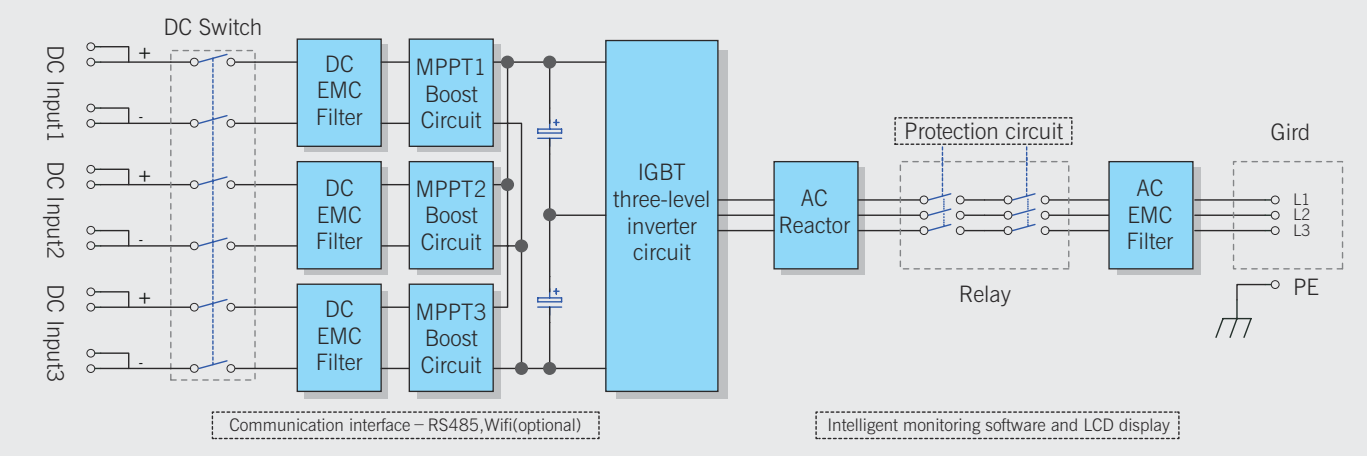

KSG-HV Series Technical Specifications

Model Specifications	KSG-36K-HV	KSG-60K-HV	KSG-80K-HV
Input(DC)			
Max. DC power	41KW	67KW	80KW
Max. DC voltage	1000Vdc		
MPPT voltage range	250~950Vdc		
Full load mppt voltage range	550~800Vdc		
Normal voltage	720Vdc		
Min. / start DC voltage	200 / 250Vdc		
Number of MPP trackers	3		6
Strings per MPP tracker	2	4	2
Max. input current per MPP tracker	26A / 26A / 26A	36A / 36A / 36A	22A×6
Output (AC)			
Normal AC output Power	36KW	60KW	72KW
Max. AC output Power	40KW	66KW	80KW
Normal AC voltage	480Vac		
AC voltage range	480Vac±10%		
Normal AC grid frequency	50 / 60Hz		
AC grid frequency range	±5Hz		
Rated. output current	44A	72A	87A
Max. output current	48A	80A	97A
Phase shift (cos φ)	0.8leading- 0.8laging		
THDI	<3%		
AC connection	3W+PE		
Topology	Transformer less		
Efficiency			
Max. efficiency	98.5%	98.6%	
Euro-eta	98.2%		
MPPT efficiency	99.9%		
Consumption: standby / night	<15W / <2W		
Protection devices			
all-pole fault current monitoring unit	yes		
AC short-circuit protection	yes		
Ground fault monitoring	yes		
Mechanism Data			
Dimensions (W / L / D) in mm	636 / 958 / 260		
Weight	61Kg	68Kg	70Kg
Environment Data			
Operating temperature range	-25℃~+60℃		
Noise emission (typical)	≤40dB	≤60dB	
Cooling concept	Convection	fans	
Protection rating	IP65		
Features			
LCD display	yes		
Interfaces	RS485		

Specifications subject to change without prior notice.

KSTAR Central Grid-tied PV Inverter Station Project
China Power Investment Corporation 200MW power station project in Golmud, Qinghai

Central Grid–tied PV Inverter

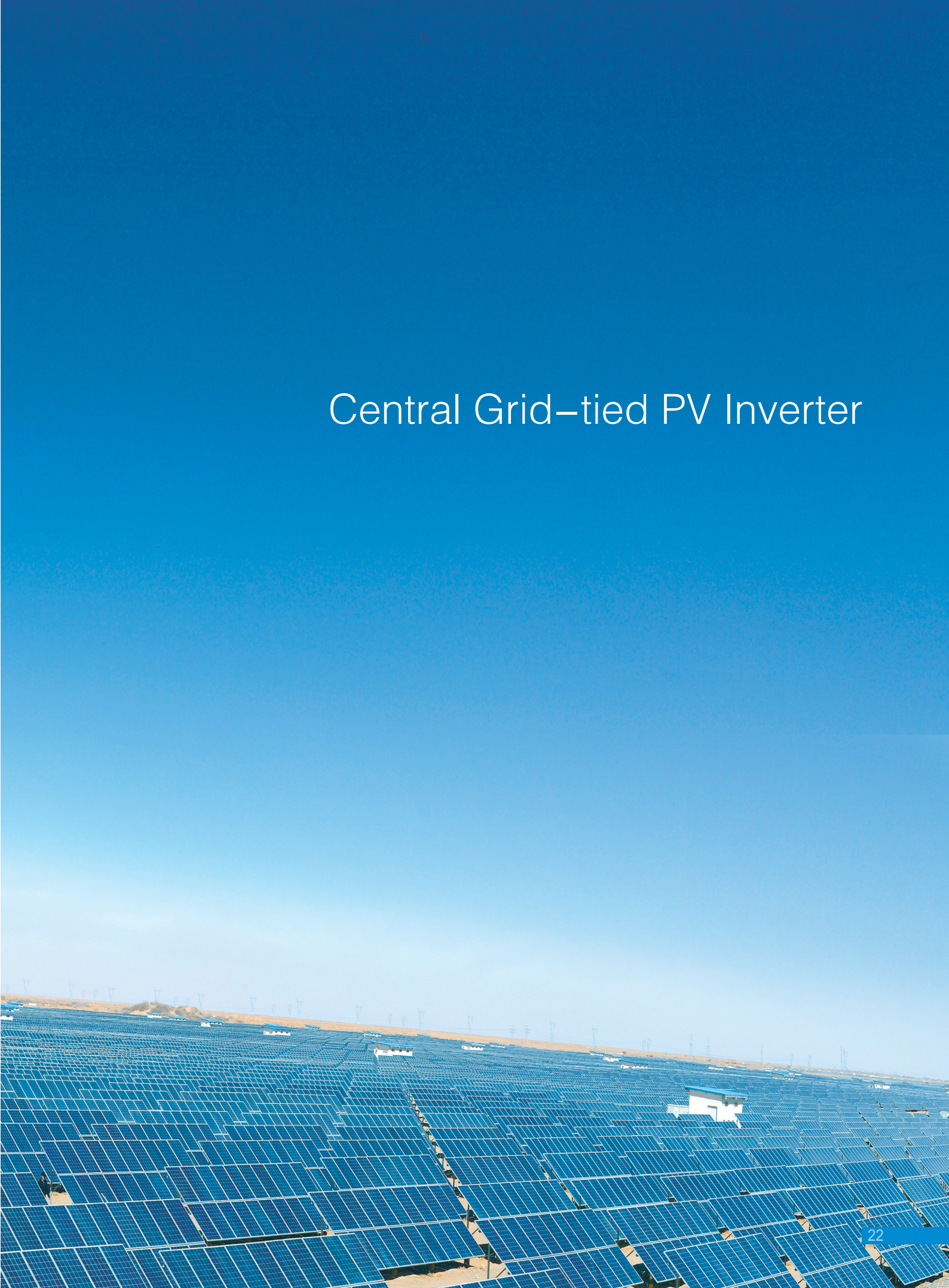

GSL SERIES

Central Grid-tied PV Inverter

500KW-750KW

- More than 25 years of life span
- Transformer-less design and compact in size
- System with strong compatibility, easy to extend
- Good cooling system and safety design
- MPPT efficiency > 99.9%
- Maximum efficiency > 98.7%
- Euro. efficiency > 98.5%
- Standby(night time) losses<10W
- Redundancy control circuits designed-in and over-size metalized film capacitors are used to guarantee its safe operation and system reliability
- Reactive power adjustable
- Unique Zero Voltage Ride Through (ZVRT) function,anti-islanding and output abnormal voltage protection secures its safe
- Advanced DSP Control makes data more accurate
- Active power adjustable continuous full range (0~100%)
- Support a variety of communication interfaces
- Perfect protection functions
- Support SVG function,the realization of power reactive compensation at night

CE、TUV、ZVRT

GSL0500 **Efficiency curve**

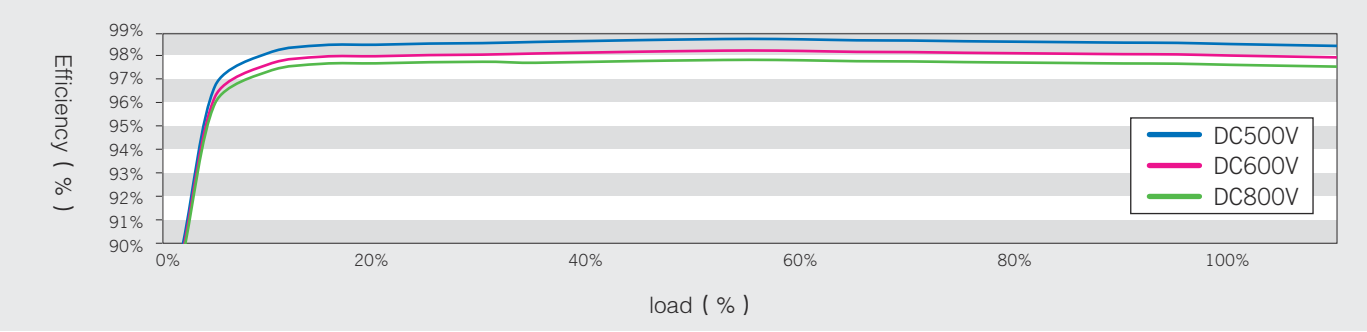

GSL0050 / GSL0630 / GSL0750 **Circuit diagram**

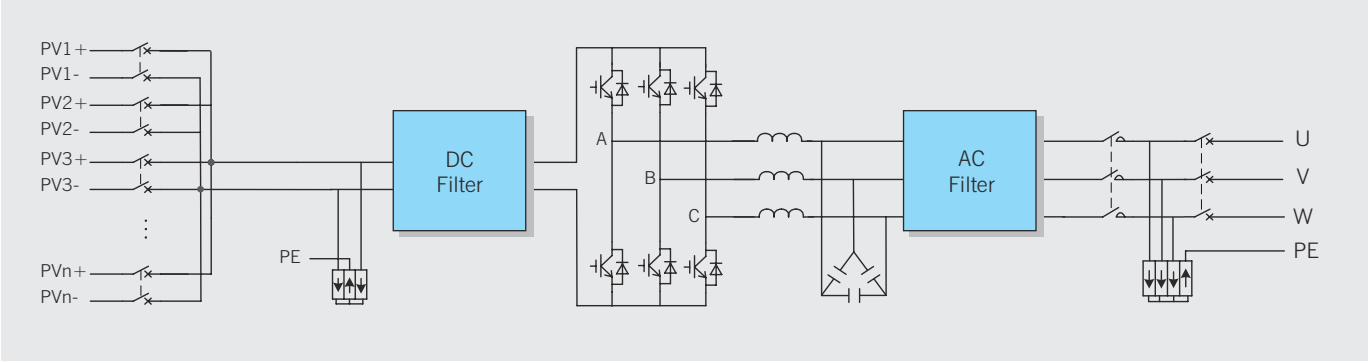

GSL Series Technical Specifications

MODEL	GSL0500	GSL0630	GSL0750
INPUT			
Max. DC input power	550KW	690KW	825KW
Max.DC input voltage	1000Vdc		
MPPT tracking voltage range	450～850Vdc		500～850Vdc
DC input number	8	10	
Max. input current	1200A	1440A	1500A
OUTPUT			
Rated output power	500KW	630KW	750KW
Rated output voltage	315Vac	315Vac	350Vac
Output voltage range	(1±15%)×Normal AC Voltage (adjustable ±5%,±10%,±15%,±20%)		
Gird frequency range	50 / 60Hz(±4.5Hz), (adjustable)		
Rated AC output current	916A	1155A	1237A
Max. AC output current	1007A	1212A	1360A
Power factor (cosΦ)	1 (0.9 leading – 0.9 lagging) (adjustable)		
Total harmonic current distortion (THDi)	<3%		
SYSTEM FEATURES			
Max. efficiency	98.7%		
Euro efficiency	98.5%		
MPPT efficiency	>99%		
Standby (night time) losses	<10W		
Cooling	Forced air cooling		
Communication interface	RS485, external Ethernet (ptional)		
ENVIRONMENTAL			
Operating temperature	–40℃ ~ +60℃ (More than 55℃ derating)		
Humidity range	0～95% (non-condensing)		
Altitude	3000m		
Noise level	<60dB		
Protection rating	IP21		
PHYSICAL			
Dimension W×D×H (mm)	1600×850×2000		
Net Weight (kg)	1200	1300	1450
STANDARDS			
IEC	IEC60068-2, IEC61683:1999, IEC62109-1,2 , IEC61727:2004, IEC62116:2008, IEC61000-6,3		

Specifications subject to change without prior notice.

GSM SERIES
Three level PV inverter

500～630KW

- More than 25 years of life span
- Transformer-less design and compact in size
- System with strong compatibility, easy to extend
- Good cooling system and safety design
- MPPT efficiency > 99.9%
- Maximum efficiency > 99%
- Euro. efficiency > 98.7%
- Standby(night time) losses<10W
- Redundancy control circuits designed-in and over-size metalized film capacitors are used to guarantee its safe operation and system reliability
- Reactive power adjustable
- Unique Zero Voltage Ride Through (ZVRT) function,anti-islanding and output abnormal voltage protection secures its safe
- Advanced DSP Control makes data more accurate
- Active power adjustable continuous full range (0~100%)
- Support a variety of communication interfaces
- Perfect protection functions
- Support SVG function,the realization of power reactive compensation at night
- 4 MPPT 4 Modul

CE、TUV、ZVRT

GSM0500 **Efficiency curve**

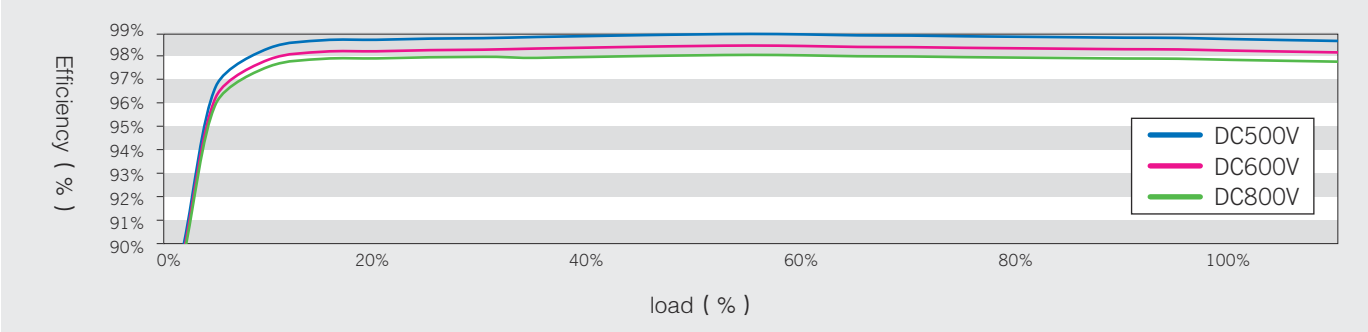

GSM0500 **Circuit diagram**

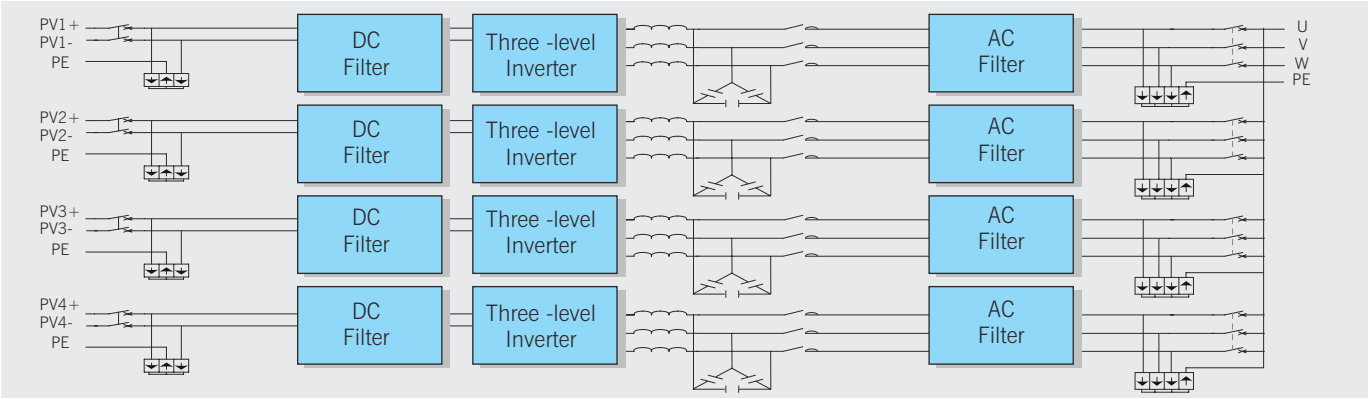

GSM Series Technical Specifications

MODEL	GSM0500	GSM0630
INPUT		
Max. DC input power	550KW	693KW
Max.DC input voltage	1000Vdc	
MPPT tracking voltage range	460～850Vdc	
Number of MPPT tracking	4	
DC input number	8	
Max. input current	1200A	1400A
OUTPUT		
Rated output power	500KW	630KW
Rated output voltage	315Vac	
Output voltage range	(1±15%)×Normal AC Voltage (adjustable ±5%,±10%,±15%,±20%)	
Gird frequency range	50 / 60Hz(±4.5Hz), (adjustable)	
Rated AC output current	916A	1155A
Max. AC output current	1007A	1212A
Power factor (cosΦ)	1 (0.9 leading – 0.9 lagging) (adjustable)	
Total harmonic current distortion (THDi)	<3%	
SYSTEM FEATURES		
Max. efficiency	99%	
Euro efficiency	98.7%	
MPPT efficiency	>99%	
Standby (night time) losses	<10W	
Cooling	Forced air cooling	
Communication interface	RS485, External Ethernet (Optional)	
ENVIRONMENTAL		
Operating temperature	–40~ + 60℃ (More than 55℃ derating)	
Humidity range	0～95% (non-condensing)	
Altitude	3000m	
Noise level	<60dB	
Protection rating	IP21	
PHYSICAL		
Dimension W×D×H (mm)	1600×850×2000	
Net Weight (kg)	1400	

Specifications subject to change without prior notice.

GSH SERIES

Central Grid high efficiency PV inverter

1MW

- DC1500V system
- More than 25 years of life span
- Transformer-less design and compact in size
- System with strong compatibility, easy to extend
- Good cooling system and safety design
- MPPT efficiency > 99.9%
- Maximum efficiency > 98.7%
- Euro. efficiency > 98.5%
- Standby(night time) losses<10W
- Redundancy control circuits designed-in and over-size metalized film capacitors are used to guarantee its safe operation and system reliability
- Reactive power adjustable
- Unique Zero Voltage Ride Through (ZVRT) function,anti-islanding and output abnormal voltage protection secures its safe
- Advanced DSP Control makes data more accurate
- Active power adjustable continuous full range (0~100%)
- Support a variety of communication interfaces
- Perfect protection functions
- Support SVG function,the realization of power reactive compensation at night

GSH1000 **Efficiency curve**

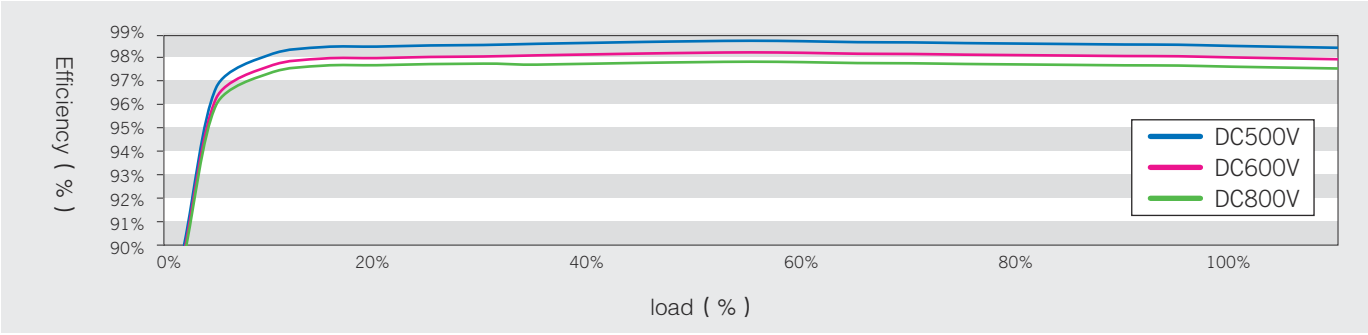

GSH1000 **Circuit diagram**

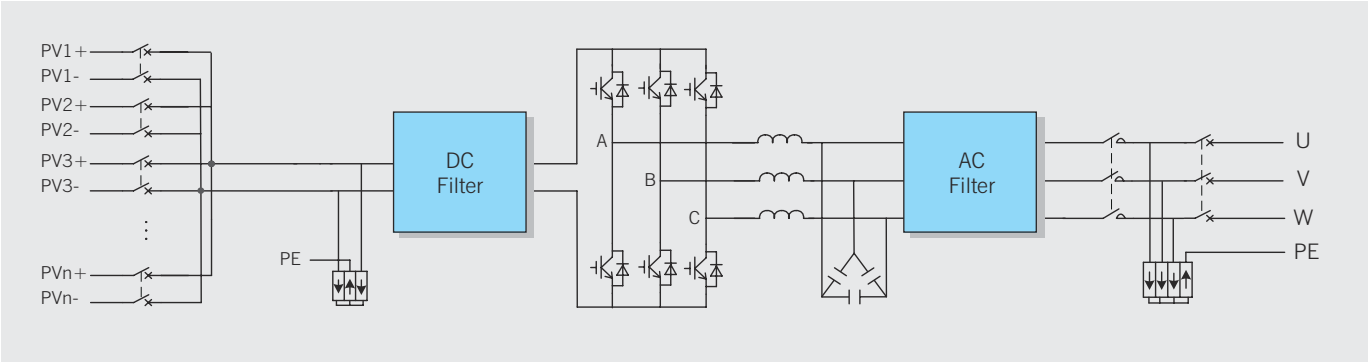

GSH Series Technical Specifications

MODEL	GSH1000
INPUT	
Max. DC input power	1100KW
Max.DC input voltage	1500Vdc
MPPT tracking voltage range	820～1250Vdc
DC input number	8
Max. input current	1400A
OUTPUT	
Rated output power	1000KW
Rated output voltage	540Vac
Output voltage range	(1±15%) x Normal AC Voltage (adjustable ±5%,±10%,±15%,±20%)
Gird frequency range	50/60Hz(±4.5Hz), (adjustable)
Rated AC output current	1070A
Max. AC output current	1180A
Power factor (cosΦ)	1 (0.9 leading – 0.9 lagging) (adjustable)
Total harmonic current distortion (THDi)	<3%
SYSTEM FEATURES	
Max. efficiency	98.8%
Euro efficiency	98.6%
MPPT efficiency	>99%
Standby (night time) losses	<10W
Cooling	Forced air cooling
Communication interface	RS485, external Ethernet (optional)
ENVIRONMENTAL	
Operating temperature	–40℃～+60℃ (More than 55℃ derating)
Humidity range	0～95% (non-condensing)
Altitude	3000m
Noise level	<60dB
Protection rating	IP21
PHYSICAL	
Dimension W×D×H (mm)	1600×850×2100
Net Weight (kg)	1500

Specifications subject to change without prior notice.

GSL SERIES with transformer

Central Grid-tied PV Inverter

100KW-500KW

- More than 25 years of life span
- System with strong compatibility, easy to extend
- Good cooling system and safety design
- MPPT efficiency > 99.9%
- Maximum efficiency > 98.1%
- Euro. efficiency > 97.9%
- Standby(night time) losses<10W
- Redundancy control circuits designed-in and over-size metalized film capacitors are used to guarantee its safe operation and system reliability
- Reactive power adjustable
- Unique Zero Voltage Ride Through (ZVRT) function, anti-islanding and output abnormal voltage protection secures its safe
- Advanced DSP Control makes data more accurate
- Active power adjustable continuous full range (0~100%)
- Support a variety of communication interfaces
- Perfect protection functions
- Support SVG function,the realization of power reactive compensation at night

CE、TUV、ZVRT

GSL0500T **Efficiency curve**

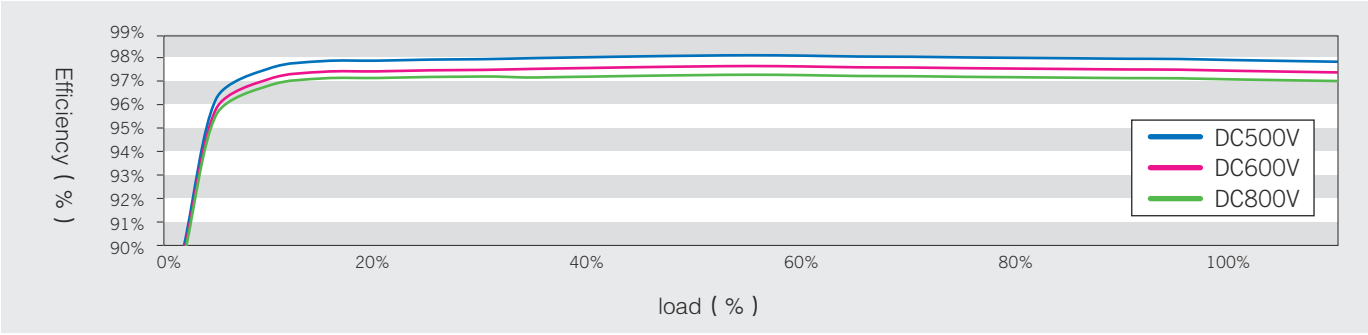

GSL0100T / GSL0250T / GSL0500T **Circuit diagram**

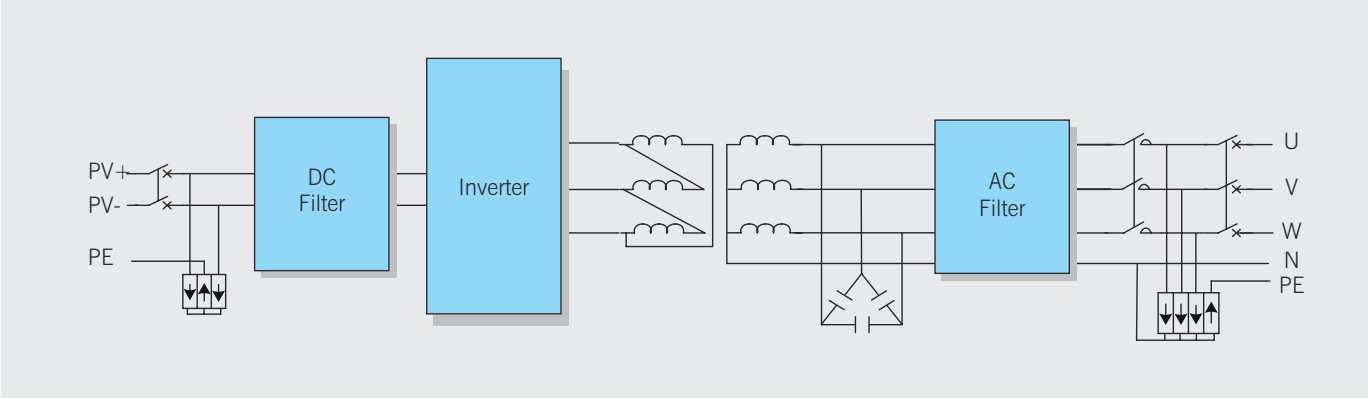

GSL Series With Transformer Technical Specifications

MODEL	GSL0100T	GSL0250T	GSL0500T
INPUT			
Max. DC input power	110KW	275KW	550KW
Max. DC input voltage	1000Vdc		
MPPT tracking voltage range	450～850Vdc		
Number of MPPT tracking	1		
Max. input current	240A	600A	1200A
OUTPUT			
Rated output power	100KW	250KW	500KW
Rated output voltage	400Vac		
AC output topology	3Ph+N+PE		
Output voltage range	(1±15%) x Normal AC Voltage (adjustable ±5%,±10%,±15%,±20%)		
Grid frequency range	50/ 60Hz (±4.5Hz), (adjustable)		
Rated AC output current	144A	361A	722A
Max. AC output current	158A	397A	794A
Power factor (cosΦ)	1 (0.9 leading – 0.9 lagging) (adjustable)		
Total harmonic current distortion (THDi)	<3%		
SYSTEM FEATURES			
Max. efficiency	97.7%	97.9%	98.1%
Euro efficiency	97.4%	97.6%	97.9%
MPPT efficiency	>99%		
Standby (night time) losses	<10W		
Cooling	Forced air cooling		
Communication interface	RS485 , external Ethernet (optional)		
ENVIRONMENTAL			
Operating temperature	–40℃~ + 60℃ (More than 55℃ derating)		
Humidity range	0～95% (non-condensing)		
Altitude	3000m		
Noise level	<58db	<60dB	
Protection rating	IP21		
PHYSICAL			
Dimension W×D×H (mm)	835×935×1850	1200×935×2200	1600×935×2200
Net weight (kg)	900	1470	2800
STANDARDS			
CQC	CNCA/CTS0004-2009A, CNCA/CTS0006-2010, NB/T 32004-2013		
CE	IEC62109-1, IEC62109-2		
TUV	IEC62109-1, IEC62109-2, IEC/EN61000-6-2, IEC/EN61000-6-4, etc		

Specifications subject to change without prior notice.

KSTAR Central Grid-tied PV Inverter Station Project
China GCL Group 20MW power station project in Datong, Shanxi

Central Grid–tied PV Inverter(outdoors)

GSL Series Container

Central Grid-tied PV Inverter with DC Power Distribution (outdoors)

1000KW-1500KW

- More than 25 years of life span
- IP54 protection class mechanism design
- System with strong compatibility, easy to extend
- Good Cooling system and safety design
- Fast installation, convenient to maintenance
- MPPT efficiency > 99.9%
- Maximum efficiency > 98.7%
- Euro. efficiency > 98.5%
- Standby(night time) losses<10W
- Adjustable power factor 0.9 leading~ 0.9 lagging
- Redundancy control circuits designed-in and over-size metalized film capacitors are used to guarantee its safe operation and system reliability
- Support SVG function, the realization of power reactive compensation at night
- Unique Low Voltage Ride Through(LVRT)function,anti-islanding and output abnormal voltage protection secures its safe
- Advanced DSP Control makes data more accurate
- Active power adjustable continuous full range (0~100%)
- Support a variety of communication interfaces
- Perfect protection functions
- Intelligent power distribution, to achieve an external auxiliary power and grid ac power backup, improve the system reliability

GSL1000 / GSL1260 / GSL1500 **Circuit diagram**

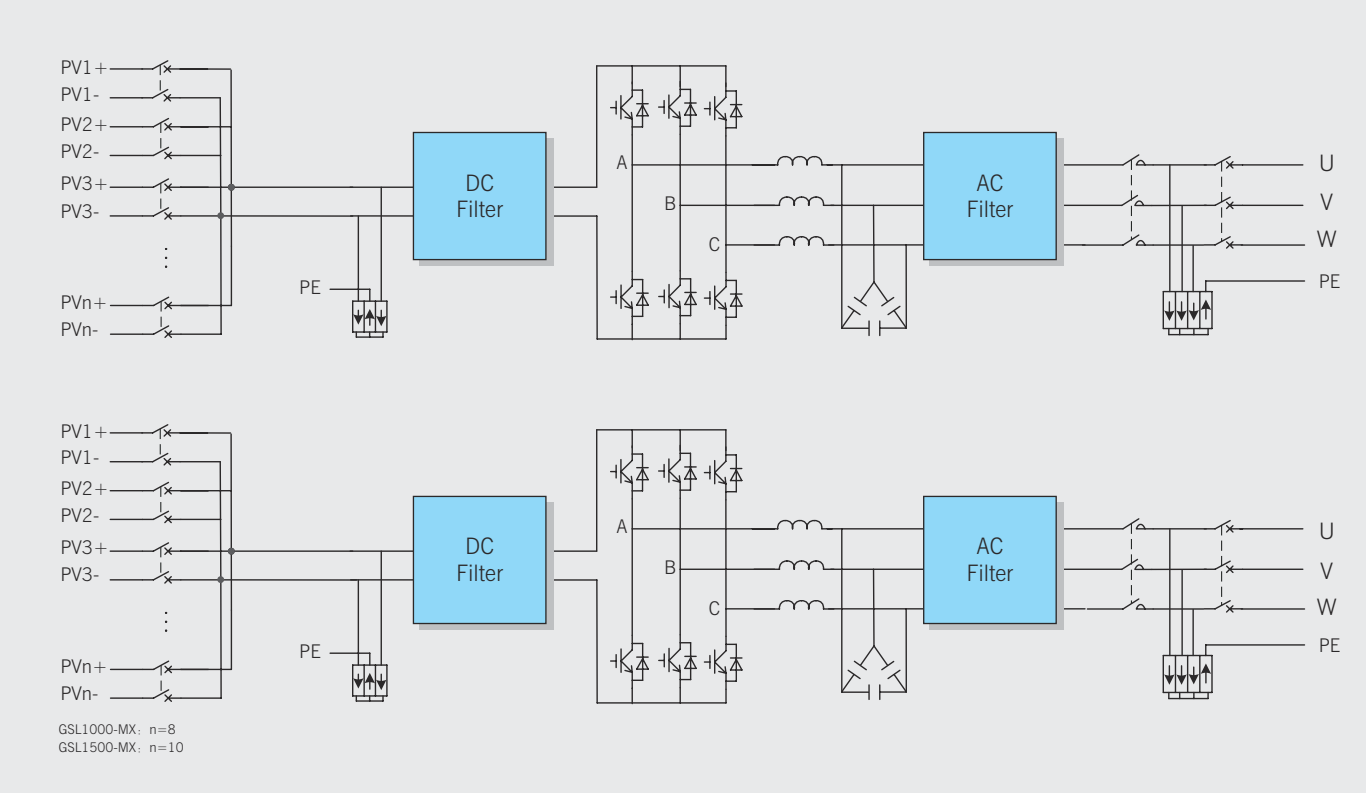

GSL-MX Series Technical Specifications

MODEL	GSL1000	GSL1260	GSL1500
INPUT			
Max. DC input power	1100KW	1386KW	1650KW
Max.DC input voltage	1000Vdc		
MPPT tracking voltage range	450～850Vdc		
Number of DC input tracking	14(14～16 optional)	18(18～20 optional)	20(20～24 optional)
Max. input current	2400A	2880A	3000A
OUTPUT			
Rated output power	1000KW	1260KW	1500KW
Rated output voltage	315Vac	315Vac	350Vac
AC output topology	3Ph+PE		
Output voltage range	(1±15%) x Normal AC Voltage (adjustable ±5%,±10%,±15%,±20%)		
Gird frequency range	50/60Hz(±4.5Hz), (adjustable)		
Rated AC output current	1836A	2310A	2474A
Max. AC output current	2014A	2424A	2720A
Power factor (cosΦ)	1 (0.9 leading – 0.9 lagging) (adjustable)		
Total harmonic current distortion (THDi)	＜3%		
SYSTEM FEATURES			
Max. efficiency	98.7%		
Euro efficiency	98.5%		
MPPT efficiency	＞99%		
Standby(night time) losses	＜10W		
Cooling	Forced air cooling		
Communication interface	RS485, external Ethernet (optional)		
ENVIRONMENTAL			
Operating temperature	–40℃ ~ +60℃ (More than 55℃ derating)		
Humidity range	0～95% (non-condensing)		
Altitude	3000m		
Noise level	＜65dB		＜70dB
Protection rating	IP54		
PHYSICAL			
Dimension W×D×H (mm)	2991×2438×2591		
Net Weight (t)	5	5.2	

Specifications subject to change without prior notice.

GSM Series Container

Central Grid-tied PV Inverter with DC Power Distribution (outdoors)

1000KW-1260KW

- More than 25 years of life span
- IP54 protection class mechanism design
- System with strong compatibility, easy to extend
- Good Cooling system and safety design
- Fast installation, convenient to maintenance
- MPPT efficiency > 99.9%
- Maximum efficiency > 99%
- Euro. efficiency > 98.7%
- Standby(night time) losses<10W
- Adjustable power factor 0.9 leading~ 0.9 lagging
- Redundancy control circuits designed-in and over-size metalized film capacitors are used to guarantee its safe operation and system reliability
- Support SVG function, the realization of power reactive compensation at night
- Unique Low Voltage Ride Through(LVRT)function,anti-islanding and output abnormal voltage protection secures its safe
- Advanced DSP Control makes data more accurate
- Active power adjustable continuous full range (0~100%)
- Support a variety of communication interfaces
- Perfect protection functions
- Intelligent power distribution, to achieve an external auxiliary power and grid ac power backup, improve the system reliability

GSM1000 / GSM1260 **Circuit diagram**

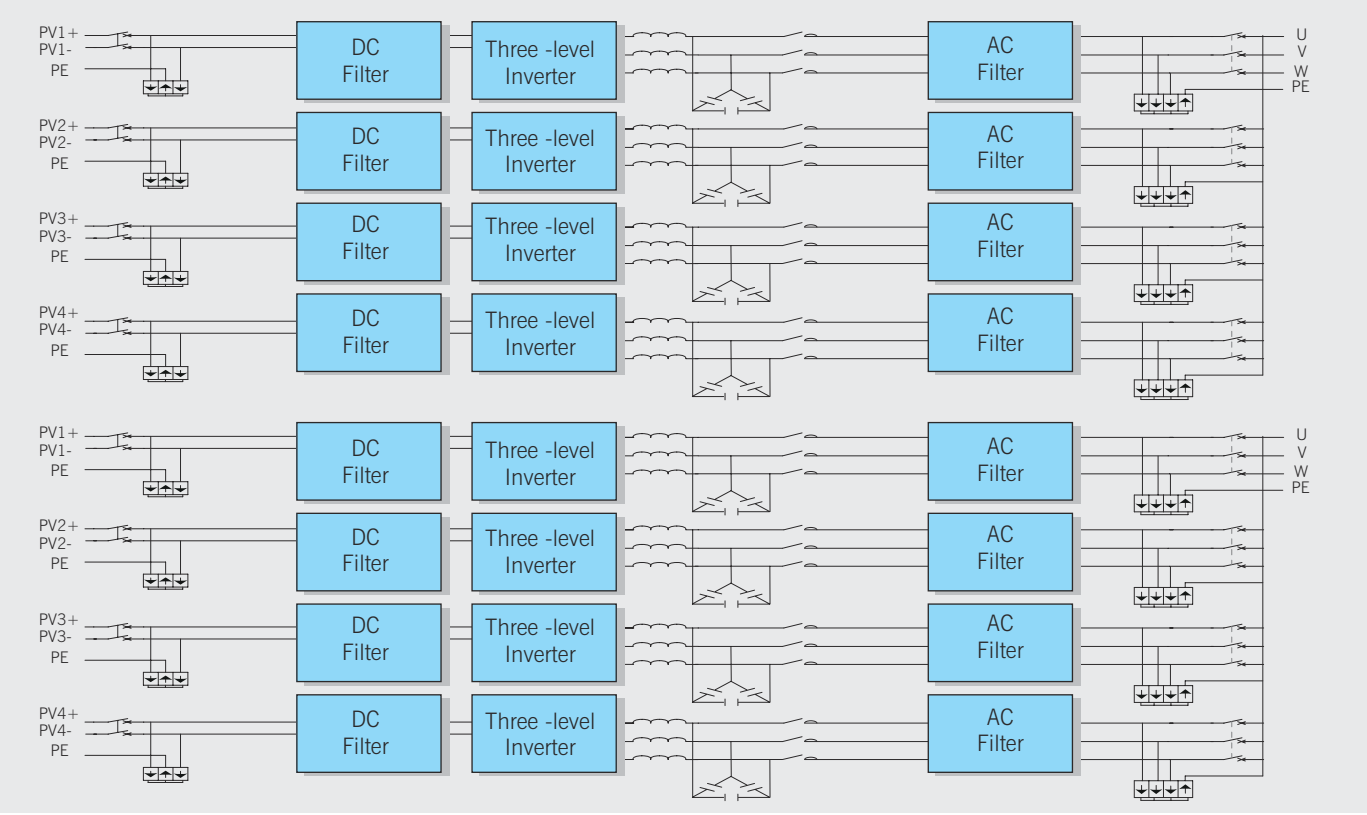

GSM Series Technical Specifications

MODEL	GSM1000	GSM1260
INPUT		
Max. DC input power	1100KW	1386KW
Max.DC input voltage	1000Vdc	
MPPT tracking voltage range	460～850Vdc	
Number of MPPT tracking	16	
Max. input current	2400A	2880A
OUTPUT		
Rated output power	1000KW	1260KW
Rated output voltage	315Vac	
Output voltage range	(1±15%)×Normal AC Voltage (adjustable ±5%,±10%,±15%,±20%)	
Gird frequency range	50 / 60Hz(±4.5Hz), (adjustable)	
Rated AC output current	1836A	2310A
Max. AC output current	2014A	2424A
Power factor (cosΦ)	1 (0.9 leading – 0.9 lagging) (adjustable)	
Total harmonic current distortion (THDi)	<3%	
SYSTEM FEATURES		
Max. efficiency	98.7%	
Euro efficiency	98.5%	
MPPT efficiency	>99%	
Standby (night time) losses	<10W	
Cooling	Forced air cooling	
Communication interface	RS485, External Ethernet (Optional)	
ENVIRONMENTAL		
Operating temperature	–40~＋60℃ (More than 55℃ derating)	
Humidity range	0～95% (non-condensing)	
Altitude	3000m	
Noise level	<65dB	<70dB
Protection rating	IP54	
PHYSICAL		
Dimension W×D×H (mm)	2991×2438×2591	
Net Weight (t)	5	5.2

Specifications subject to change without prior notice.

GSH Series Container

Central Grid high efficiency PV inverter

2MW

- DC1500V system
- More than 25 years of life span
- Transformer-less design and compact in size
- System with strong compatibility, easy to extend
- Good cooling system and safety design
- MPPT efficiency > 99.9%
- Maximum efficiency > 98.7%
- Euro. efficiency > 98.5%
- Standby(night time) losses<10W
- Redundancy control circuits designed-in and over-size metalized film capacitors are used to guarantee its safe operation and system reliability
- Reactive power adjustable
- Unique Zero Voltage Ride Through (ZVRT) function,anti-islanding and output abnormal voltage protection secures its safe
- Advanced DSP Control makes data more accurate
- Active power adjustable continuous full range (0~100%)
- Support a variety of communication interfaces
- Perfect protection functions
- Support SVG function,the realization of power reactive compensation at night

GSH2000 **Efficiency curve**

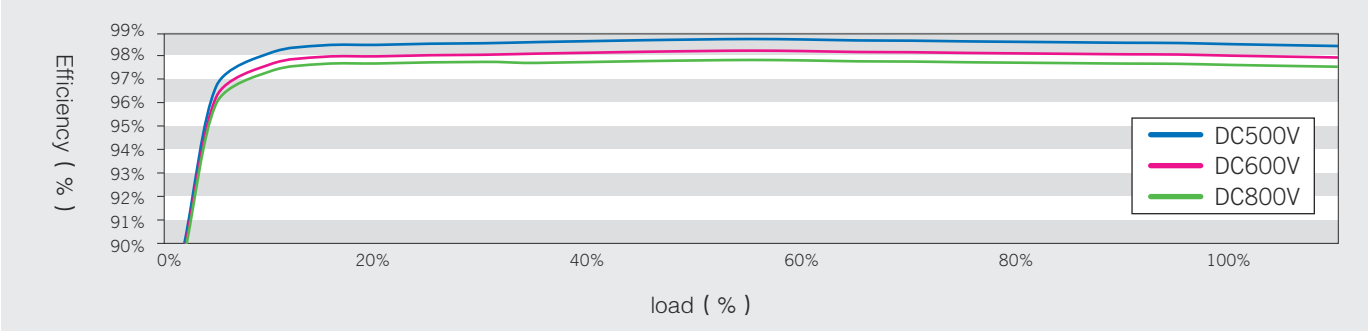

GSH2000 **Circuit diagram**

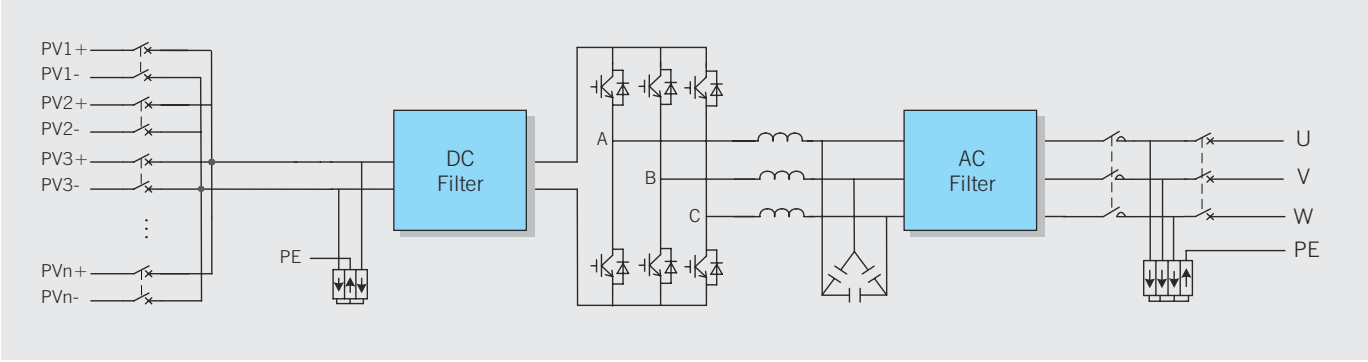

GSH Series Technical Specifications

MODEL	GSH2000
INPUT	
Max. DC input power	2200KW
Max.DC input voltage	1500Vdc
MPPT tracking voltage range	820～1250Vdc
DC input number	16
Max. input current	2800A
OUTPUT	
Rated output power	2000KW
Rated output voltage	525Vac
Output voltage range	(1±15%) x Normal AC Voltage (adjustable ±5%,±10%,±15%,±20%)
Gird frequency range	50/60Hz(±4.5Hz), (adjustable)
Rated AC output current	2140A
Max. AC output current	2360A
Power factor (cosΦ)	1 (0.9 leading – 0.9 lagging) (adjustable)
Total harmonic current distortion (THDi)	<3%
SYSTEM FEATURES	
Max. efficiency	98.8%
Euro efficiency	98.6%
MPPT efficiency	>99%
Standby (night time) losses	<10W
Cooling	Forced air cooling
Communication interface	RS485, external Ethernet (optional)
ENVIRONMENTAL	
Operating temperature	–40℃ ~ +60℃ (More than 55℃ derating)
Humidity range	0～95% (non-condensing)
Altitude	3000m
Noise level	<60dB
Protection rating	IP54
PHYSICAL	
Dimension W×D×H (mm)	4300×2438×2591
Net Weight (kg)	7000

Specifications subject to change without prior notice.

KSE SERIES

3.6kw/4.6kw/5kw

- Solution for energy independence
- Self-consumption mostly to save money
- Compatible with both lead-acid and Li-ion battery
- Optimal scheme of battery charge and discharge that extend battery life
- Work with either grid-tied or off grid mode
- IP65 protection and wall mount design to save space
- Fan-less design

5KW Hybrid Inverter

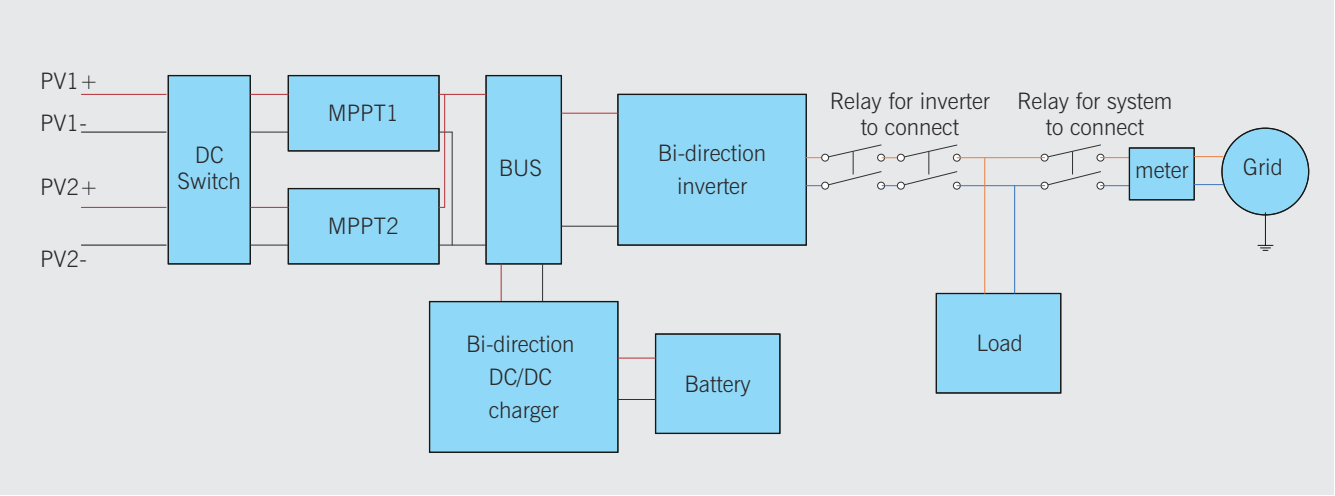

KSE Series Technical Specifications

MODEL	KSE-3.6K-048	KSE-4.6K-048	KSE-5K-048
INPUT			
Max. DC input power	4600W	5600W	6000W
Max. DC input voltage	550Vdc		
MPPT tracking voltage range	150～500Vdc (Rated voltage 360Vdc)		
Number of MPPT tracking	2		
Max. input current for each tracking	15A×2		
OUTPUT			
Rated output power	3.68k	4.6k	5k
Max. AC output power	3.68k	4.6k	5k
Rated output voltage	230Vac		
Output voltage range	180V～280V		
AC output topology	L+N+PE, Transformer-less		
Grid frequency range	50 / 60Hz (±5Hz), (adjustable)		
Max. output current	16A	20A	22A
Grid-tied Power factor (cosΦ)	0.9 leading ～0.9 lagging		
Total harmonic current distortion (THDi)	<3%		
SYSTEM FEATURES			
Max. efficiency	>97.6%		
Euro efficiency	>97%		
MPPT efficiency	99.5%		
Rated battery voltage	48V		
Max. charger or discharger current	80A	100A	
Battery type	Lead Acid or Lithium		
Cooling	Convection		
DC switch	Optional		
Communication interface	RS485 standard, external WiFi or Ethernet (optional)		
ENVIRONMENTAL			
Operating temperature	-20°C～+60°C (Power De-rating from 45°C)		
Humidity range	0～95% (non-condensing)		
Altitude	≦2000m		
Noise level	<35dB (1 meter from surface)		
PHYSICAL			
Package Size (W×H×D)mm	520×420×180		
Shipping weight (kg)	28	30	
STANDARDS			
Safety	IEC/EN62109-1,IEC/EN62109-2,VDE0126-1-1, VDE AR N4105,G83/59/EEG2012,AS3100/4777,CEI 0-21,etc		
EMC	EN61000-6-2, EN61000-6-3, EN61000-3-11, EN61000-3-12, etc		
Protection rating	IP65		

Specifications subject to change without prior notice.

GSE SERIES

Energy storage bidirectional converter

50KW～630KW

- Access to and control of the power grid or load requirements
- Flexible adjusting voltage difference, bi-directional DC / DC converter with battery features the best match
- Dc side voltage stability, conducive to run system continues to be funny
- Independent charge and discharge circuit and filling depth control, a balanced current effectively
- Cells of cutting and maintenance convenience, easy to realize large capacity storage system
- A highly integrated, high efficiency and energy saving

Circuit diagram

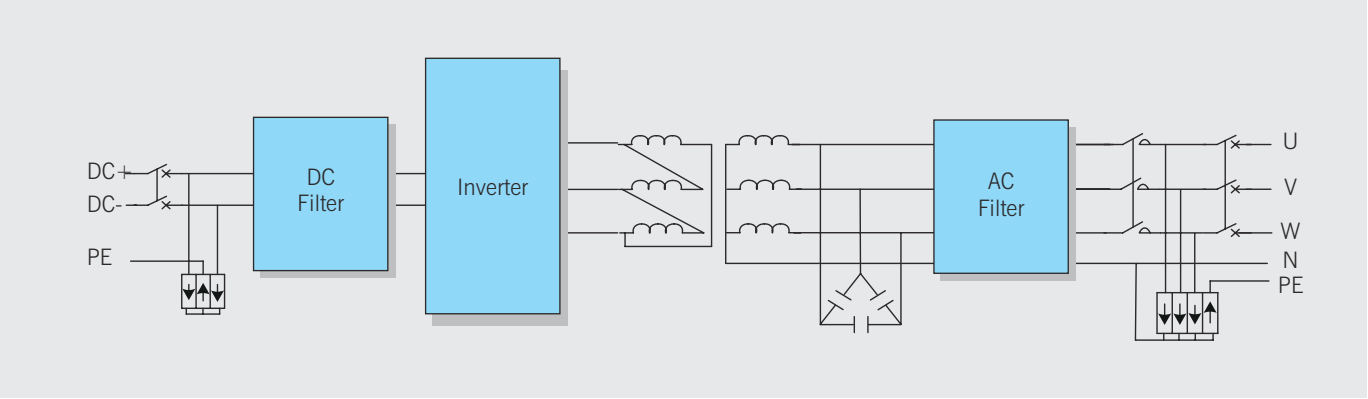

GSE Series Technical Specifications

MODEL	GSE0050T	GSE0100T	GSE0250T	GSE0500T	GSE0500	GSE0630
INPUT						
Max. DC input power	55KW	110KW	275KW	550KW	550KW	690KW
Battery rated voltage	400~800Vdc				500~800Vdc	
Battery voltage range	500~800Vdc					
Max. input current	110A	220A	550A	1100A	1100A	1200A
OUTPUT						
Rated output power	50KW	100KW	250KW	500KW	500KW	630KW
Max output voltage	55KW	110KW	275KW	550KW	550KW	690KW
AC output topology	3Ph+N+PE				3Ph+PE	
Rated output voltage	400Vac				315Vac (without transformer)	
Rated AC output current	72A	144A	361A	722A	916A	1155A
Max. AC output current	80A	160A	400A	800A	1007A	1212A
On-grid model						
Grid voltage allow range	400Vac(－20%~+15%)				315Vac(－20%~+15%)	
Grid frequency allow range	50Hz (±2Hz), (adjustable) / 60Hz (±2Hz)					
Total harmonic current distortion (THDi)	<3%					
Power factor (cosΦ)	1 (0.9 leading – 0.9 lagging) (adjustable)					
ZVRT	Yes					
Off-grid model						
Rated output voltage	380 / 400 / 415Vac				315Vac	
Output voltage distortion measure	<2% (linear load)					
SYSTEM FEATURES						
Max. efficiency	>96.5%	>97%	>97.3%	>97.5%	>98.3%	>98.5%
charge-discharge switch time	<40ms					
Protection rating	IP20					
Humidity range	0~95% (non-condensing)					
Operating temperature	－30℃～50℃					
Altitude	3000m					
UI	LCD					
Communication interface	RS485, external Ethernet (optional)					
BMS	allow					
Dimension W×D×H (mm)	800×935×2200		1200×935×2200	1600×935×2200	1600×935×2200	1600×935×2200
Net Weight (kg)	420	860	1350	2770	1400	1420

GSC SERIES
PV Array Combiner

- IP65 highest level protection
- PV-dedicated surge protection device, fuses and circuit breakers
- High performance voltage/current sensor, High precision measurement
- Real-time monitoring to the status of fuse, breaker, and SPD
- Alarms for PV array and blown fuse
- RS485 and Modbus-RTU communication Protocol
- Anti-feedback diode,wireless module, remote controller for breaker (optional)

PV array combiner without anti-feedback diode

Model	Feature
GSC08-M GSC12-M GSC16-M	Intelligent PV array combiner (8/12/16)
GSC08 GSC12 GSC16	PV array combiner (8/12/16)

PV array combiner with anti-feedback diode

Model	Feature
GSC08-DM GSC12-DM GSC16-DM	Intelligent PV array combiner with diode (8/12/16)
GSC08-D GSC12-D GSC16-D	PV array combiner with diode (8/12/16)

DC1500V combiner

Model	Feature
GSC08-MH GSC12-MH GSC16-MH	HV Intelligent PV array combiner（8/12/16）

Technical Specifications (without Anti-feedback doide)

Model	GSC08- M	GSC12- M	GSC16- M	GSC08	GSC12	GSC16
Parameter						
Max. PV Array Parallel Inputs	8	12	16	8	12	16
Rated Current for Each String	10/15A (Replaceable)					
Operating voltage range	200～1000Vdc					
System power	From PV array			–		
Communication	RS485 / Modbus-RTU protocol，9600bps			–		
Isolution resistance	>100MΩ					
Physical						
Dimension W×D×H (mm)	600×240×640	720×200×514		600×240×640	720×200×514	
Weight (Kg)	26	35		24	33	
Enviormental						
Operating temperature	-40℃～+65℃					
Protection rating	IP65					
Humidity range	0～95% (non-condensing)					
Altitude	3000m					

Technical Specifications (with Anti-feedback doide)

Model	GSC08- DM	GSC12- DM	GSC16- DM	GSC08-D	GSC12-D	GSC16-D
Parameter						
Max. PV Array Parallel Inputs	8	12	16	8	12	16
Rated Current for Each String	10/15A (replaceable)					
Operating voltage range	200～1000Vdc					
System power	From PV array			–		
Diode Spec	55A/1600V					
Communication	RS485 / Modbus-RTU protocol，9600bps			–		
Isolution resistance	>100MΩ					
Physical						
Dimension W×D×H (mm)	600×240×640	720×240×640		600×240×640	720×240×640	
Weight (Kg)	32	40		30	38	
Enviormental						
Operating temperature	-40℃～+65℃					
Protection rating	IP65					
Humidity range	0～95% (non-condensing)					
Altitude	3000m					

Technical Specifications（DC1500V）

Model	GSC08-MH	GSC12-MH	GSC16-MH
Parameter			
Max. PV Array Parallel Inputs	8	12	16
Rated Current for Each String	15A		
Operating voltage range	0～1500Vdc		
Physical			
Dimension W×D×H (mm)	600×240×640	720×200×514	
Weight (Kg)	26	35	

2012-10-22 11:04:30
太阳能光伏并网发电系统

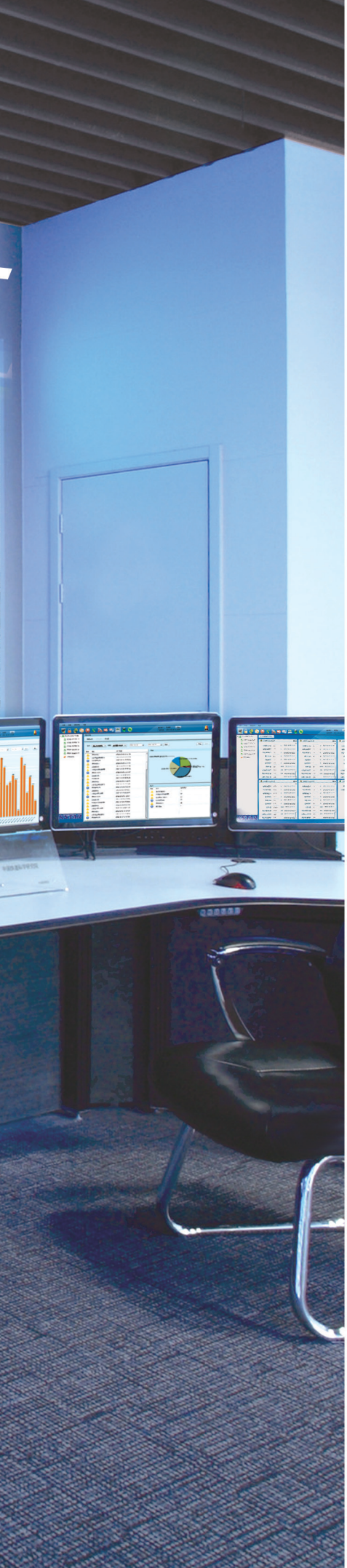

Monitoring System

Small PV power station monitoring system

KSG Monitoring Software
KSM Data Collector
Wifi/Ethernet Communication Module

Medium-large PV power station monitoring system

KSolar Monitoring Software
DCU Data Collector
Ethernet Converting Module

Ambient Monitor

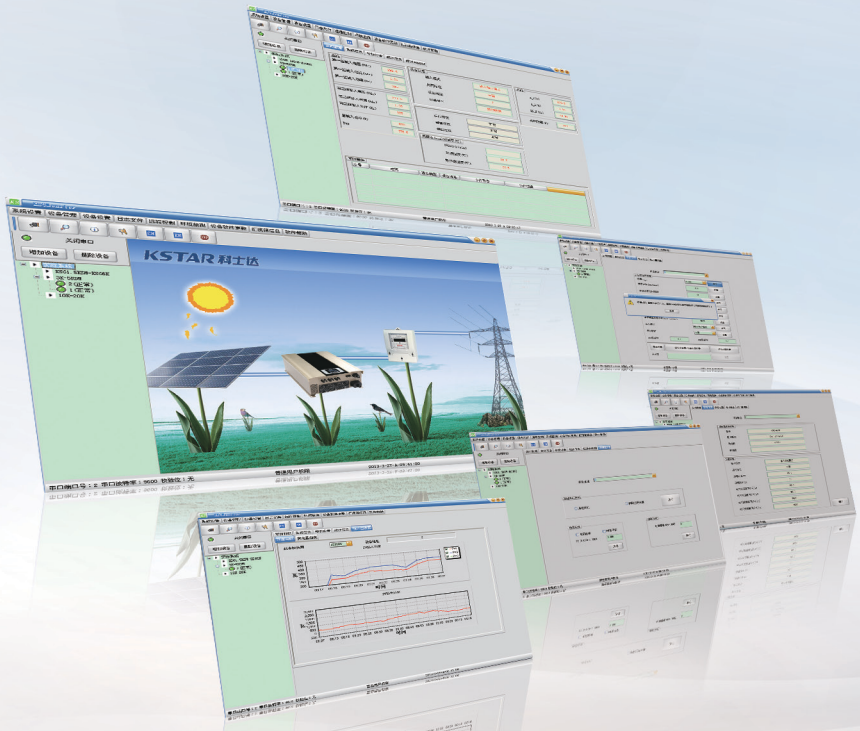

KSG Monitoring Software

KSG Monitor is a monitoring software designed for Kstar KSG series and operated under Windows platforms via RS485 data converter and WiFi / Ethernet communication module. It is suitable for small-size PV power station monitoring system.

Language	Chinese/English
Operating system	Windows system
Optimum resolution	1024×768
Monitor data	System data, data setup, Online statistics data, Statistical curve, etc
Inverter monitor	temperature, DC bus voltage, Each current, DSP state
DC power distribution cabinet data	The remote switch control, power-factor control, Power regulation
Store data records	Store data records and fault information
Support PV inverter series	KSG-SM series, KSG-DMseries, KSG-TMseries
Communication mode	485/Wifi/Ethernet

KSM Data Collector

KSM inverter data collector performs effectively and collects the working status and power generation of the PV power station system continuously.

Support different data collector formats of KSG-SM, KSG-DM and KSG-TM.

Various communication methods, such as Ethernet / WiFi / GPRS are easily adapted to the system.

Support up to 32 PV inverters in parallelling

Can connect additional equipment such as meters, radiation sensor, and temperature sensor

Data storage can be up to more than 25 years.

No additional software is needed for accessing to the internet.

Easy-to-read display chart for system data

Number of inverter can be connected	1~32
Communication	RS485/422/232
Remote monitor	GPRS,Wifi（802.11b/g/n）/Ethernet
Wireless working frequency	800/900/1800/1900MHz（GPRS）,2.4GHz（Wifi）
Wireless communication distance	（GPRS），400m
Data collection frequency	5min/time, 1~15min(optional)
Data storage	SD card/EEPROM (optional)
Firmware update mode	serial port/wireless
Data access	remote server/Wifi
Operating temperature	-10℃~65℃
Humidity range	0~95%(non-condensing)
Protection rating	IP21

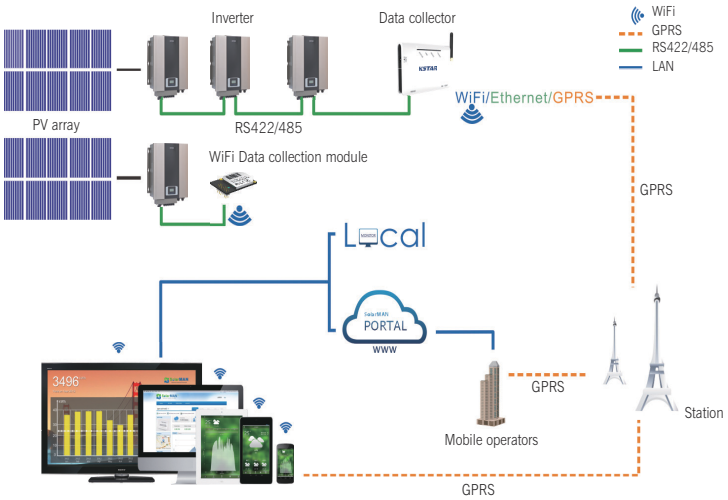

Wifi/Ethernet Communication Module

Features

Support 802.11b/g/n wireless standard, frequency range 2.412G-2.484G

Support TCP/IP Network Protocols

Support wireless working under STA/AP mode

Support RS485, WiFi and Ethernet

Function

Provide wireless data transmission

Provide Ethernet port transmission

Provide remote monitoring and control of the PV inverter via network protocol

Support KSG-SM，KSG-DM，and KSG-TM series

Free bundled KSG Monitor software for windows system can remotely monitor and control real-time operation data, system information, setting information, grid connection statistics, and event log, etc

KSolar Monitoring Software

KSolar is designed for medium-large PV power station system. With DCU collector, it can monitor PV power station inverter, PV array combiner, DC power distribution cabinet and box-type transformer etc. Power station environment can also be monitored, if connected to small-size weather monitor.

Quality Assurance

Elegant and easy-to-use large screen display module

Perfectly adapt with Ministry of Housing and Urban-Rural Development and Golden Sun Data center.

Flexible solution

Under windows platform, it is easy to be installed and worked with different operation system.

Intelligent management

Support intelligent management to increase equipment, automatic information acquisition device running data and fault data export

Language	Chinese/English
Working system	Windows system
Hardware requirements	Processor PⅢ 800MHz, Memory 512MB, Hard-disk 20GB
Optimum resolution	1024×768
Power station monitoring data	List of inverter, Daily electricity degree, Total electricity degree, Real-time total power
Inverter monitor	Daily electricity degree, Total electricity degree, The total running time, Real-time total power, AC voltage, AC current, AC frequency, Temperature, fault information, Statistical chart
PV array combiner monitor	Internal temperature, DC bus voltage, Each current, DSP state
DC power distribution cabinet monitor	Each current, Switch state, etc
Environmental	Irradiation, Wind direction, Wind speed, Panel temperature, Ambient temperature
Fault warning	Email and text message
Storage data	Storage data records and fault information

DCU Data Collector

DCU data collector is an intelligent device specially designed for PV power station system, roof PV system and simultaneously. It can also be applied to electrical power, finance, telecommunication and environmental monitoring, etc

Steady and reliable

With superior anti-lightning design, it secures the performance of the data collection under harshest environment

Support different accesses to various kinds of intelligent device.

Provide four serial ports, two for RS232 and two for RS485

Support USB, Ethernet port, optional wireless module can support GPRS and local wireless communication

6 pcs analog acquisition channels to support the data collection of 4~20mA current or 0~10V voltage

Support different protocols and also support DL/T645 protocol

Real-time clock and synchronous transmission

Allows for more than 40 device access

Optional USB or Micro SD may storage more historical events

Wall mount or 19” rack installation is available

Communication	
Inverter interface	RS485
PC communication interface	RS232/Ethernet/GPRS
Wireless communication	Zigbee
Maximum communication distance	
RS485/ Ethernet	1.2Km/100m
Wireless（Zigbee）	1Km
RS232	15m
Storage	
Internal memory	16MB dataflash/2K eeprom
Expand memory	MicroSDcard/512MB/1GB/2GB(optional)
Parameter	
Input voltage range	100～240Vac，50Hz
Power losses	＜20W
Environmental	
Operating temperature	-20℃～60℃
Humidity range	0～95% (non-condensing)
Storage temperature	−40℃～70℃
Physical	
Dimension W×D×H (mm)	436.6×238×42.5
Options	
MicroSD card（2GB）,GPRS module,wireless module（Zigbee）(Optional)	

Ethernet Converting Module

SolarNet is an Ethernet serial converting module, embedded with TCP/IP protocol, in order to be connected with Ethernet easily. The module contains four(4) serial ports and one(1) Ethernet port.The baud rate of the serial communication port can reach 115.2Kbps and it also supports RS232/RS485/R422 ports

Features

Support data transmission between serial and Ethernet port

TCPServer port is optional to support DHCP and static IP address

Support RS232 and RS485 / RS422

Technical Specifications

Parameter	
Operating voltage	12Vdc
Power losses	<5W
Environmental	
Operating temperature	-40℃ ~ 60℃
Storage temperature	-40℃ ~ 70℃
Communication	
Ethernet	100Mbps，RJ45
RS232/RS485/RS422	2400~115200bps，1200m

Ambient Monitor

IP65 industrial protection for harshest outdoor application

Modular design for easy installation

Radiation sensor supports either horizontal or tilt installation, which can be combined with other weather sensor.

RS485 supports modbus RTU protocol

Parameter	
Operating voltage	100～240Vac, 50/60Hz
Power losses	＜5W
Environmental	
Operating temperature	-40℃～60℃
Storage temperature	-40℃～70℃
Protection rating	IP65
Communication	
Communication interface	RS485
Communication distance	1000m
Sensors	
Radiation sensor	●
Battery surface temperature sensor	○
Ambient temperature sensor	●
Wind speed sensor	●
Wind direction sensor	●

●standard ○optional

Model	Feature
Wind speed sensor	Measurement range: 0 ～60m/s Measurement accuracy: ≤±2% Wind speed accuracy: 0.1m/s start-up wind speed: ≤ 0.2m/s
Ambient temperature sensor	Measurement range: -40℃～65℃ Measurement accuracy: ≤±0.2℃ Measurement resolution: 0.1℃
Temperature sensor	Measurement range: 0～100% Measurement accuracy: ≤±2% Measurement resolution: 0.1%
Wind direction sensor	Measurement range: 16 azimuth（360°） Measurement accuracy: ≤±3%
Radiation sensor	Spectral range: 300～3000nm Measurement range: 0～2000W/m² Measurement accuracy: ≤±3% Measurement resolution: 1W/m² sensitivity: ≤ 7～14μV/（W·m-2）
Box Dimension W×D×H (mm)	295×245×160
Battery surface temperature sensor	Measurement range: -30℃～100℃ Measurement accuracy: ≤±0.2℃ Measurement resolution: 0.1℃
Environmental collection module	Support modbus protocol
Three feet bracket	1250mm

Solar Deep Cycle Battery Series

Battery rating: 38Ah ~ 3000Ah

Features: Solar use, floating charge lifetime can reach up to 6~10 years

Standard safe patent tray is to prevent shot-ciruit fire accident caused by battery leakage

Applicable to solar power storage device

CE

Model	Voltage (V)	Rated capacity (Ah)			Dimension(mm)				Weight (kg)	PortType
		10HR	5HR	1HR	W	D	H	Overall height		
		1.80V/C	1.75V/C	1.75V/C						
6-FM-38T	12	38	32.3	22.8	198	166	170	170	12	M1
6-FM-65T	12	65	55.3	39	350	167	177	177	20	M2
6-FM-100T	12	100	85	60	407	174	208	236	32.5	M3
6-FM-150T	12	150	128	90	532	207	216	219	47.8	M3
6-FM-200T	12	200	170	120	523	240	225	230	57.5	M3
GFM-200T	2	200	180	120	172	111	329	365	13.1	M3
GFM-300T	2	300	270	180	171	151	330	366	18	M3
GFM-400T	2	400	360	240	210	171	329	363	25	M3
GFM-500T	2	500	450	300	241	172	331	366	29	M3
GFM-600T	2	600	540	360	301	175	331	366	35	M3
GFM-800T	2	800	720	480	410	175	330	365	49.5	M3
GFM-1000T	2	1000	900	600	475	175	328	365	56.3	M3
GFM-1500T	2	1500	1350	900	401	351	342	378	92.6	M3
GFM-2000T	2	2000	1800	1200	491	351	343	383	122.5	M3
GFM-3000T	2	3000	2700	1800	712	353	341	382	174	M3

Product Certificate

TUV
(VDE4105/VDE0126)

BV
(G83/G59/VDE4105/VDE0126)

CE

Australia SAA

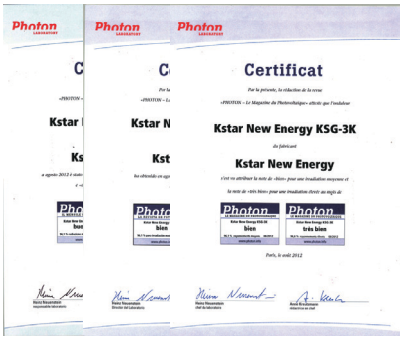

PHOTON(A)

Italy CEI 0-21/Belgium C10/11

ZVRT

Grid adaptive

CGC / CQC

Company Certificate

Certificate HK03/0243

The management system of

Shenzhen Kstar Science And Technology Co., Ltd.
深圳科士達科技股份有限公司

Kstar Industrial Park, Fumin Industrial Zone, Guanlan, Shenzhen City, Guangdong Province, P.R. China
中國廣東省深圳市觀瀾福民工業區科士達工業園

has been assessed and certified as meeting the requirements of

ISO 9001:2008

For the following activities

Design and manufacture of uninterruptible power supplies;
Design and manufacture of inverters and rectifiers;
Design and manufacture of metal case for power supplies
不間斷電源的設計與制造；逆變器及整流器的設計與制造；
電源機箱的設計與制造

Further clarifications regarding the scope of this certificate and the applicability of ISO 9001:2008 requirements may be obtained by consulting the organization.

This certificate is valid from 23 August 2009 until 22 August 2012
and remains valid subject to satisfactory surveillance audits.
Re certification audit due before 22 July 2012
Issue 5. Certified with SGS since August 2003
SGS Ref # CN09/31499

Authorised by

SGS United Kingdom Ltd Systems & Services Certification
Rossmore Business Park Ellesmere Port Cheshire CH65 3 EN UK
t +44 (0)151 350-6666 f +44 (0)151 350-6600 www.sgs.com

SGS 9001-8-01 1108

Page 1 of 1

Certificate CN05/31094

The management system of

Shenzhen Kstar Science And Technology Co., Ltd.
深圳科士達科技股份有限公司

Kstar Industrial Park, Fumin Industrial Zone, Guanlan, Shenzhen City, Guangdong Province, P.R. China
中國廣東省深圳市
觀瀾福民工業區科士達工業園

has been assessed and certified as meeting the requirements of

ISO 14001:2004

For the following activities

Design and manufacture of uninterruptible power supplies
Design and manufacture of inverters and rectifiers
Design and manufacture of metal case for power supplies
不間斷電源的設計與製造；逆變器及整流器的設計與製造；
電源機箱的設計與製造

This certificate is valid from 2 June 2011 until 2 June 2014
and remains valid subject to satisfactory surveillance audits.
Re certification audit due before 25 March 2014
Issue 4. Certified since 2 June 2005

Authorised by

SGS United Kingdom Ltd Systems & Services Certification
Rossmore Business Park Ellesmere Port Cheshire CH65 3 EN UK
t +44 (0)151 350-6666 f +44 (0)151 350-6600 www.sgs.com

SGS EMS 04 0105

Page 1 of 1

ISO9001

ISO14001

Certificate CN09/31038

The management system of

Shenzhen Kstar Science And Technology Co., Ltd.
深圳科士達科技股份有限公司

Kstar Industrial Park, Fumin Industrial Zone, Guanlan, Shenzhen City, Guangdong Province, P.R. China
中國廣東省深圳市
觀瀾福民工業區科士達工業園

has been assessed and certified as meeting the requirements of

OHSAS 18001:2007

For the following activities

Design and manufacture of uninterruptible power supplies
Design and manufacture of inverters and rectifiers
Design and manufacture of metal case for power supplies
不間斷電源的設計與製造；逆變器及整流器的設計與製造；
電源機箱的設計與製造

Further clarifications regarding the scope of this certificate and the applicability of OHSAS 18001:2007 requirements may be obtained by consulting the organization.

This certificate is valid from 3 June 2011 until 3 June 2014
and remains valid subject to satisfactory surveillance audits.
Re certification audit due before 29 May 2014
Issue2. Certified since 14 July 2009

Authorised by

SGS CSTC Standards Technical Services Co., Ltd. :Systems & Services Certification
16F Century YuHui Mansion, No. 73 Fucheng Road, Beijing, P.R. CHINA 100142
t +86 (0)10 6845-6699 f +86 (0)10 6845-8121 www.sgscstc.com

Page 1 of 1

IEC QUALITY ASSESSMENT SYSTEM (IECQ)
covering Electronic Components,
Assemblies, Related Materials and Processes
For rules and details of the IECQ visit www.iecq.org

IECQ Certificate of Conformity
Hazardous Substance Process Management

IECQ Certificate No.: IECQ-H SGSCN 10.0039 | Issue No.: 1 | Status: Current
Supersedes: | Issue Date: 2010/08/04 | Org Issue: 2010/08/04
CB Certificate Number: PRC-HSPM-1769 | Expiration: 2013/08/03

Applicable to:
European Directive 2002/95/EC ("RoHS") requirements

Shenzhen Kstar Science And Technology Co., Ltd.
Kstar Industrial Park, Fumin Industrial Zone,
Guanlan, Shenzhen City, Guangdong Province,
China

The organization has developed and implemented Hazardous Substance Process Management procedures and related processes which have been assessed and found to comply with the applicable requirements for IECQ HSPM organization approval which is in accordance with the Basic Rules IECQ 01 and Rules of Procedure QC 001002-5 "IECQ Hazardous Substances Process Management" of the IEC Quality Assessment System for Electronic Components (IECQ), and with respect to the IECQ Specification QC 080000.

This Certificate is applicable to all electronic components, assemblies, related materials and processes for the following scope of activities:
Design and manufacture of uninterruptible power supplies

Certificate Issued by the Certification Body (CB):
SGS-CSTC Standards Technical Services Co., Ltd
Signature:
Authorized person: Mr Ben Tsang
Fucheng Road Beijing China
Web Site: www.sgs.com

Certification Body Sponsoring NAI:
Electronic Components Certification Board
Midland Texas 79708 UNITED STATES
Web Site: www.eccb.org

The validity of this certificate is maintained through on-going surveillance inspections.
Note: This Certificate of Conformity may be suspended or withdrawn in accordance with the Rules of Procedure of the IECQ.
This certificate and any schedule(s) may only be reproduced in full.
This certificate is not transferable and remains the property of the issuing body.
The Status and authenticity of this certificate may be verified by visiting the Official IECQ Website (www.iecq.org).

Attached Translations: None

IECQ-H Rev. 03

OHSAS18001

IECQ QC080000